Material / Materiaal			
No. / Nr.	Plan	Article / Artikel	Quantity / Aantal
1	---	1003901	1
2	X004421	1904140	1
3	X004422	1904136	1
4	X004460	1904569	1
5	X004491	1905009	3
6	X004504	1904069 (L)	1
	X004428	1904070 (R)	1
7	X004721	1735900	1
8	Y015195	17245.. (L)	1
	Y015196	17246.. (R)	1
9	---	1908784	1
10	---	1001564	1
11	---	1007000	1
12	---	1008492	1
13	---	1990752	6
14	---	1991017	1
15	---	1997879	2
16	---	T001002	1

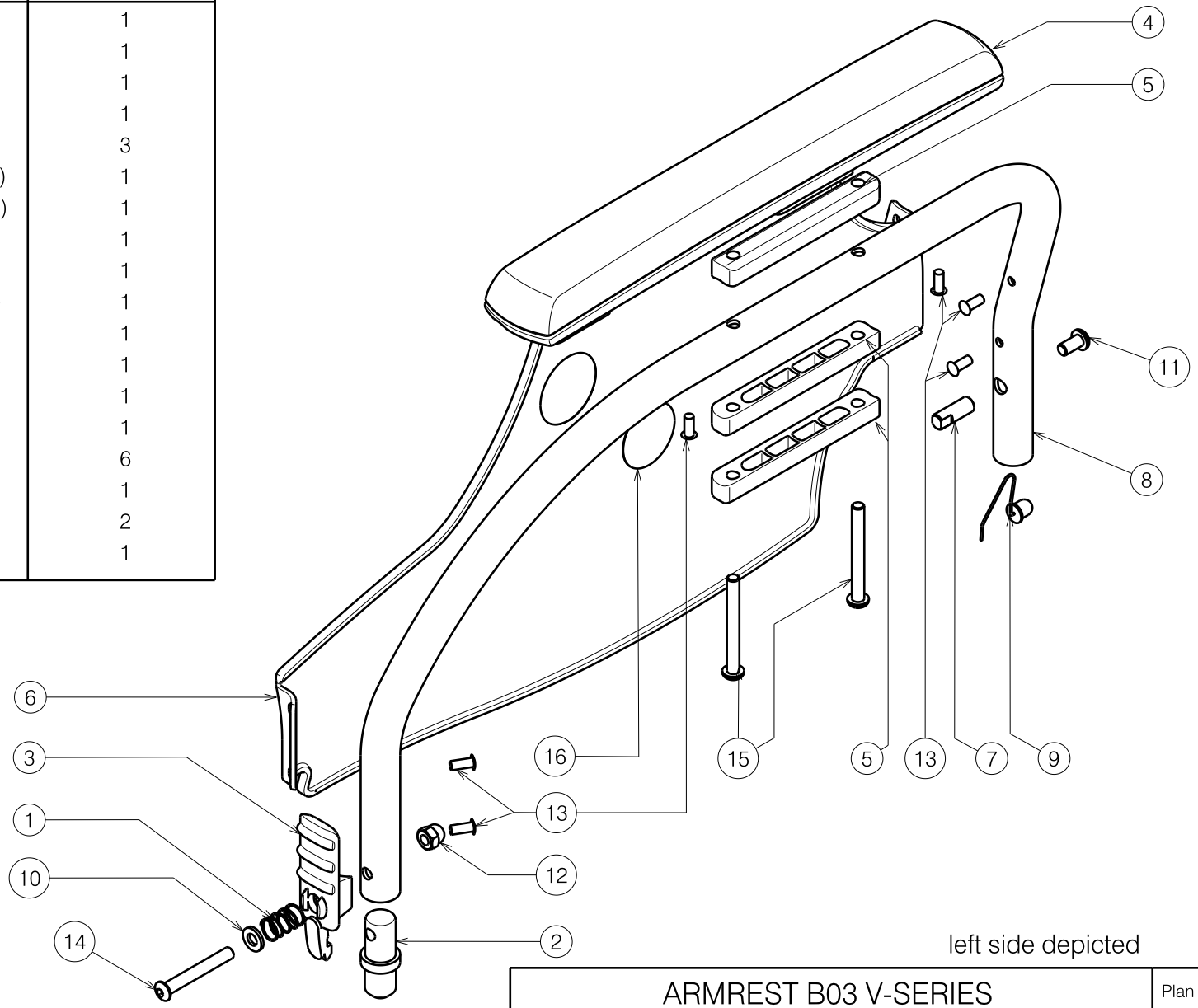

left side depicted

2990895

ARMREST B03 V-SERIES
ARMSTEUN B03 V-SERIE

Plan No. / Plannr.
E000623 / G

Scale / Schaal: 1:3	Drafted / Getekend	Verified / Nagezien	Confirmed / Bevestigd
Date / Datum	27/04/2010	16/05/2019	16/05/2019
Init. / Init.	TM	SD	PJ

VERMEIREN

E000623 / G

Material / Materiaal			
No. / Nr.	Plan	Article / Artikel	Quantity / Aantal
1	---	1003901	1
2	X004421	1904140	1
3	X004422	1904136	1
4	X004460	1904569	1
5	X004491	1905009	3
6	X004504	1904069 (L)	1
	X004428	1904070 (R)	1
7	X004721	1735900	1
8	---	1908784	1
9	Y016716	17362.. (L)	1
	Y016717	17363.. (R)	1
10	---	1001564	1
11	---	1007000	1
12	---	1008492	1
13	---	1990752	6
14	---	1991017	1
15	M6x55 ISO7380	1997879	2
16	---	T001002	1

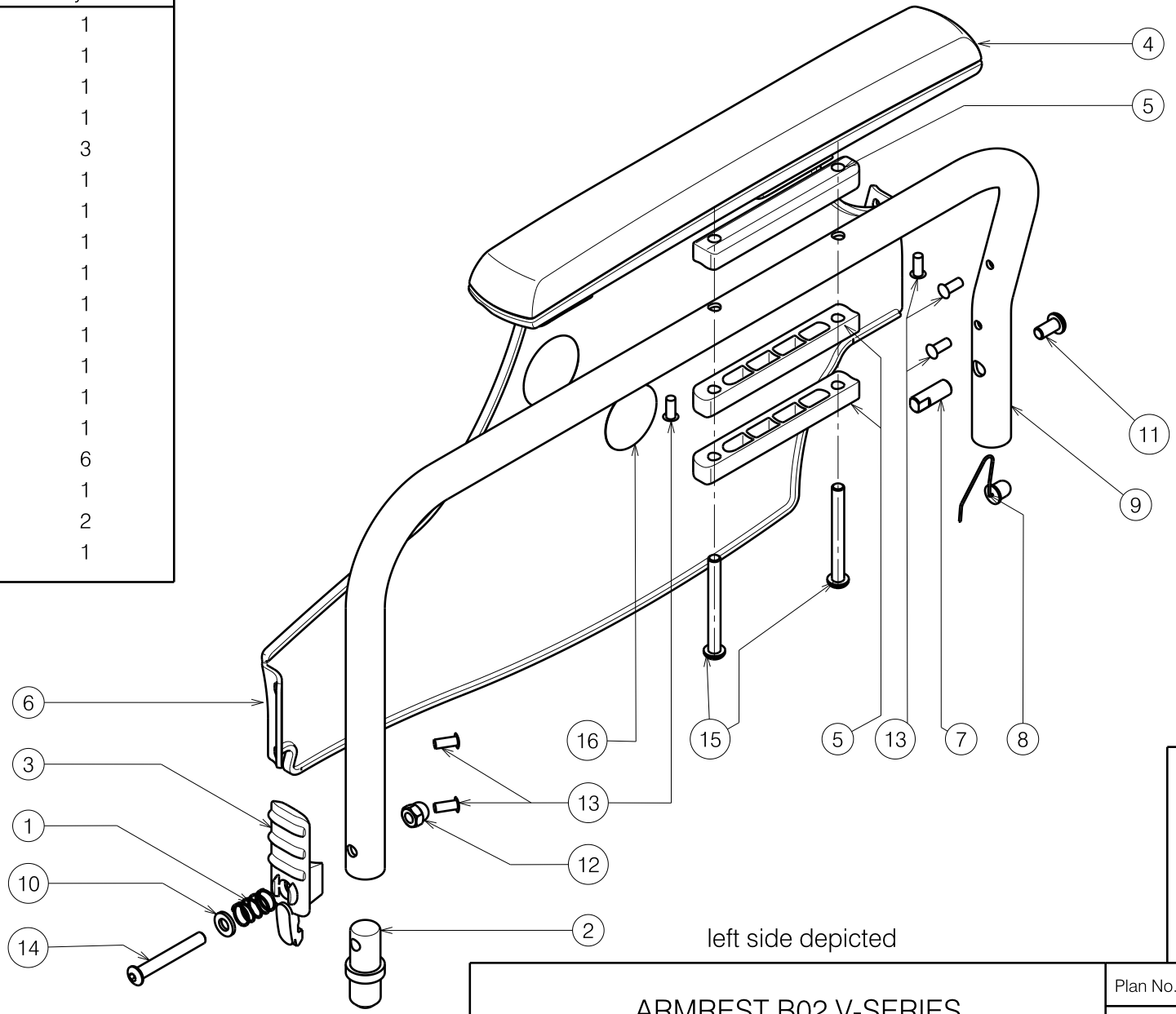

left side depicted

2990873

ARMREST B02 V-SERIES				Plan No. / Plannr.
				E000632 / G
Scale / Schaal: 1:3	Drafted / Getekend	Verified / Nagezien	Confirmed / Bevestigd	
Date / Datum	28/04/2010	16/05/2019	16/05/2019	
Init. / Init.	TM	SD	PJ	

E000632 / G

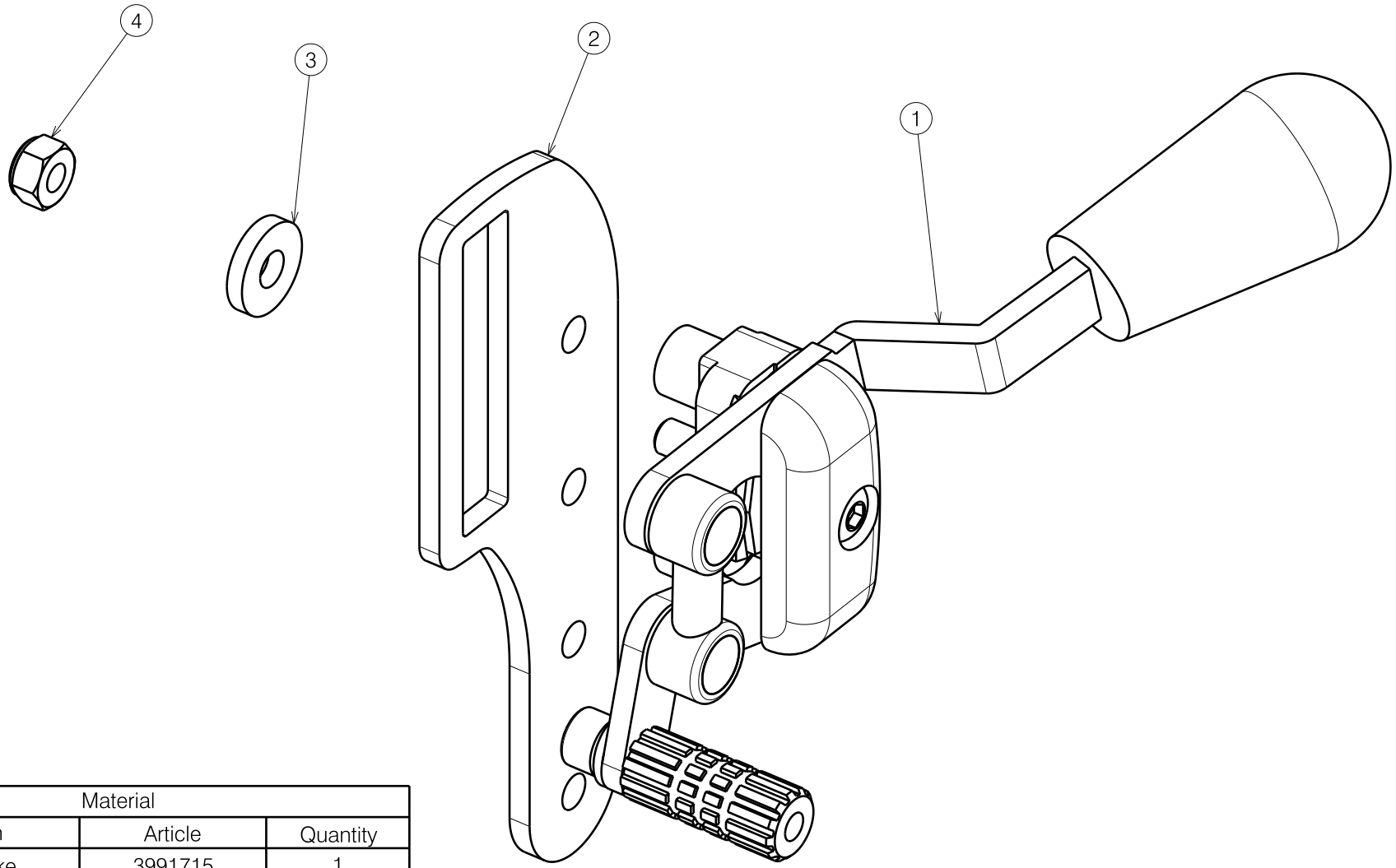

Material			
No.	Plan	Article	Quantity
1	Left brake	3991715	1
2	Y021061	2008654	1
3	M6 DIN7349	1003321	1
4	M6 DIN985	1001680	1

1910793

BRAKE T30 D-SERIES 2014 Sheet 1/2 Left side				Plan No. E000970 / C
Scale: 1:1	Drafted	Verified	Confirmed	VERMEIREN
Date	06/10/2014	19/12/2014	19/12/2014	
Initials	SD	SD	PJ	

E000970 / C

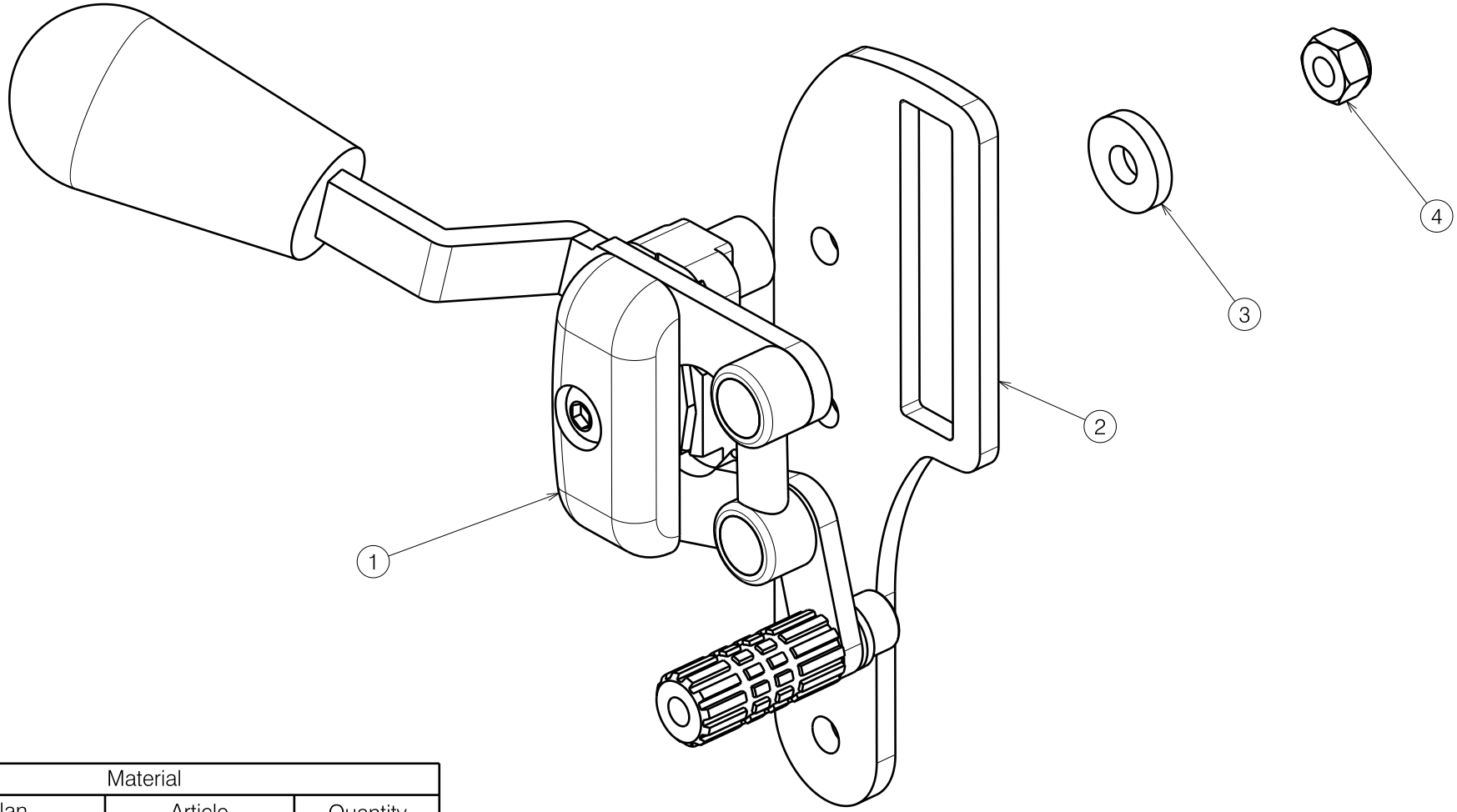

Material			
No.	Plan	Article	Quantity
1	Right brake	3991716	1
2	Y021061	2008654	1
3	M6 DIN7349	1003321	1
4	M6 DIN985	1001680	1

E000970 / C

1910794

BRAKE T30 D-SERIES 2014 Sheet 2/2 Right side				Plan No. E000970 / C
Scale: 1:1	Drafted	Verified	Confirmed	
Date	06/10/2014	19/12/2014	19/12/2014	
Initials	SD	SD	PJ	

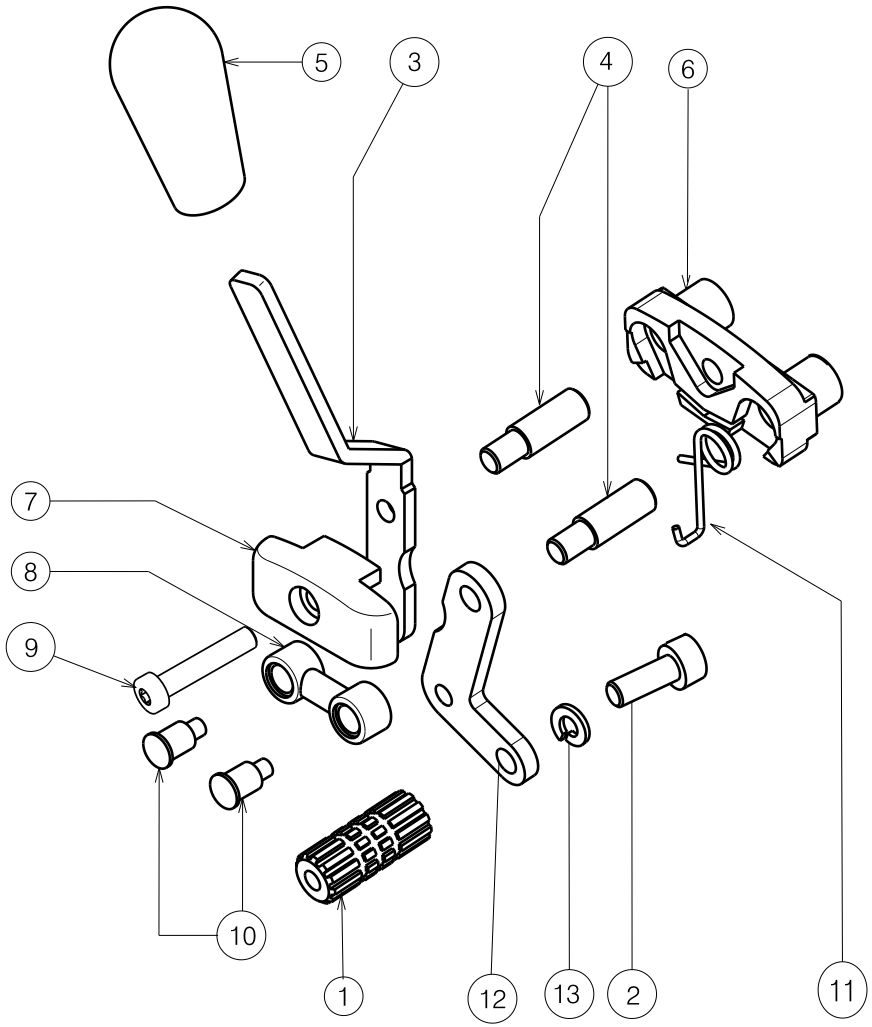

Material / Materiaal			
No. / Nr.	Plan	Article / Artikel	Quantity / Aantal
1	X005274	17937	1
2	---	1001492	1
3	Y016713	1735454	1
4	X005276	1793900	2
5	X002134	1992411	1
6	X002139	1992426	1
7	X002140	1992427	1
8	X002141	1992435	1
9	DIN6912 M6X35	3991947	1
10	X002165	1488300	2
11	X005305	1910032	1
12	Y020193	1794054	1
13	---	1004414	1

3991532

BRAKE LEFT JAZZ S50 (2013)

Plan No. / Plannr.: EC00209/C

Scale / Schaal: 1:2	Drafted / Getekend	Verified / Nagezien	Confirmed / Bevestigd
Date / Datum	20/1/14	20/1/14	20/1/14
Init. / Init.	Betty	TH	TG

VERMEIREN

EC00209/C

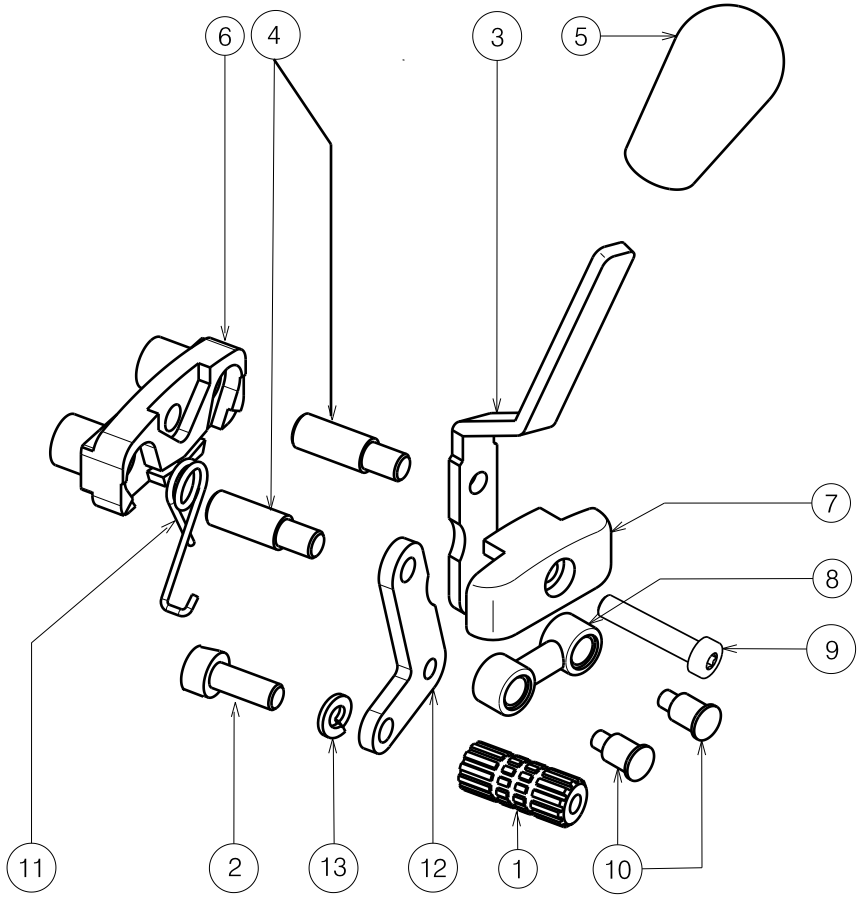

Material / Materiaal			
No. / Nr.	Plan	Article / Artikel	Quantity / Aantal
1	X005274	17937	1
2	---	1001492	1
3	Y016715	1735554	1
4	X005276	1793900	2
5	X002134	1992411	1
6	X002139	1992426	1
7	X002140	1992427	1
8	X002141	1992435	1
9	DIN6912 M6X35	3991947	1
10	X002165	1488300	2
11	X005306	1910033	1
12	Y020193	1794054	1
13	---	1004414	1

3991533

BRAKE RIGHT JAZZ S50 (2013)

Plan No. / Plannr.: EC00210/C

Scale / Schaal: 1:2	Drafted / Getekend	Verified / Nagezien	Confirmed / Bevestigd
Date / Datum	20/1/14	20/1/14	20/1/14
Init. / Init.	Betty	TH	TG

VERMEIREN

EC00210/C

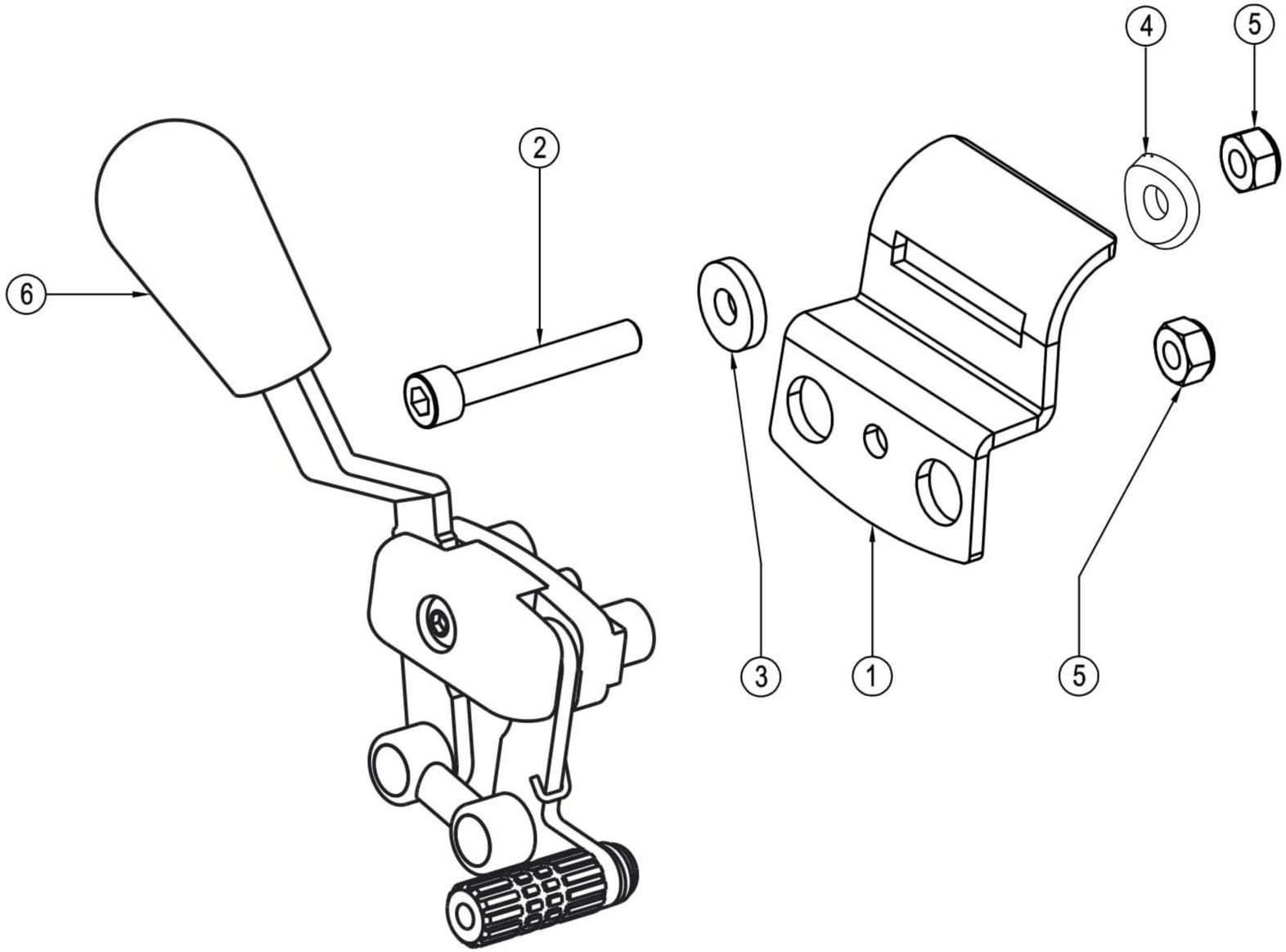

Material			
NO.	Plan	Article	Number
1	YC00397	1C17654	1
2	---	1003909	1
3	---	1003321	1
4	---	1911842	1
5	---	1001680	2
6	EC00209	3991532	1

EC00213/B

BRAKE LEFT FOR S50 / S50I / D100 / D200 (2013)				Plan No. / Plannr.
				EC00213/B
Scale / Schaal: 1 : 1	Drafted / Getekend	Verified / Nagezien	Confirmed / Bevestigd	VERMEIREN
Date / Datum	20/1/2014	18/11/2015	18/11/2015	
Init. / Init.	Betty	Betty	TG	

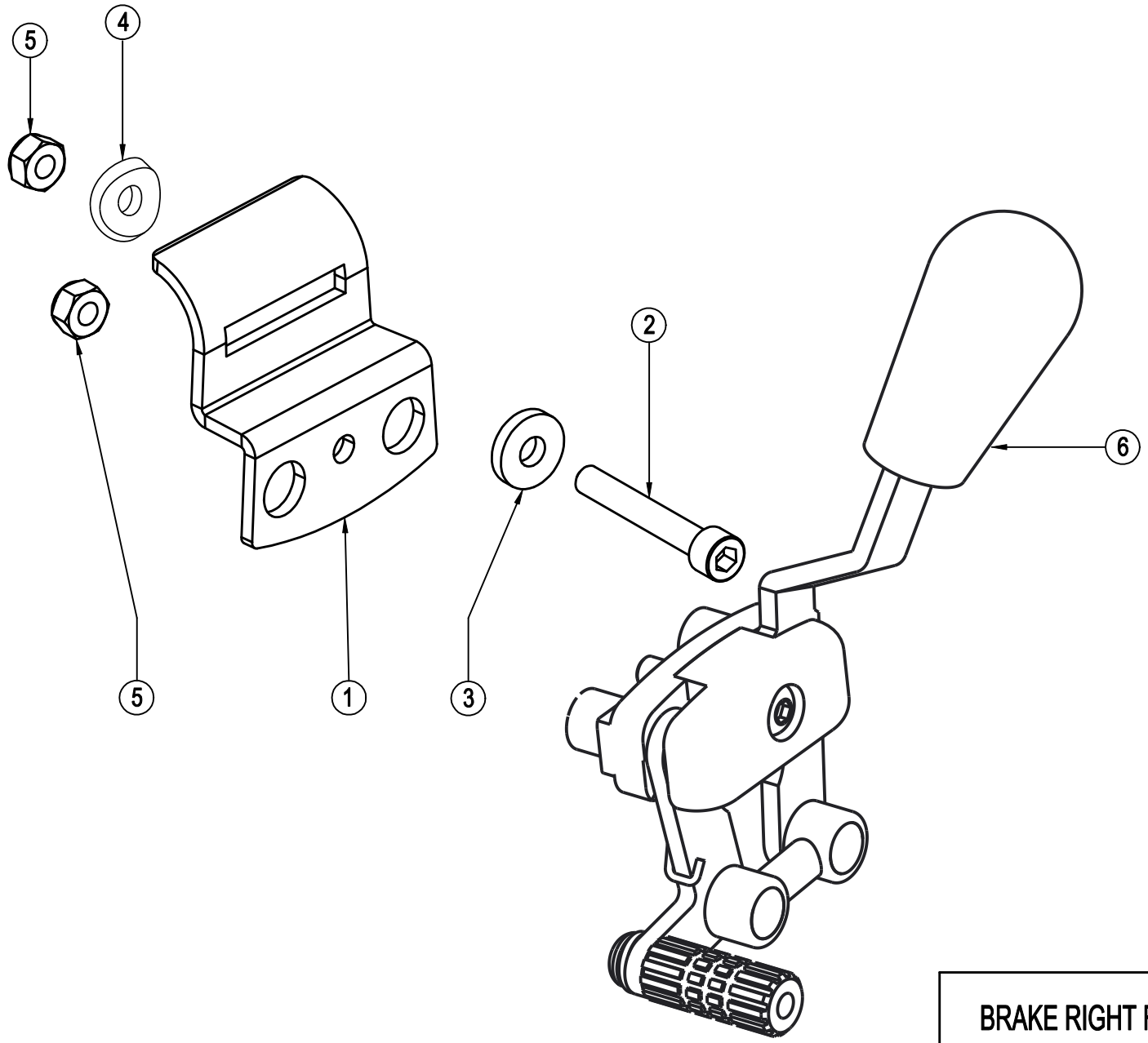

Material			
NO.	Plan	Article	Number
1	YC00397	1C17654	1
2	---	1003909	1
3	---	1003321	1
4	---	1911842	1
5	---	1001680	2
6	EC00210	3991533	1

EC00214/B

BRAKE RIGHT FOR S50 / S50I / D100 / D200 (2013)				Plan No. / Plannr.
				EC00214/B
Scale / Schaal: 1 : 1	Drafted / Getekend	Verified / Nagezien	Confirmed / Bevestigd	VERMEIREN
Date / Datum	20/1/2014	18/11/2015	18/11/2015	
Init. / Init.	Betty	Betty	TG	

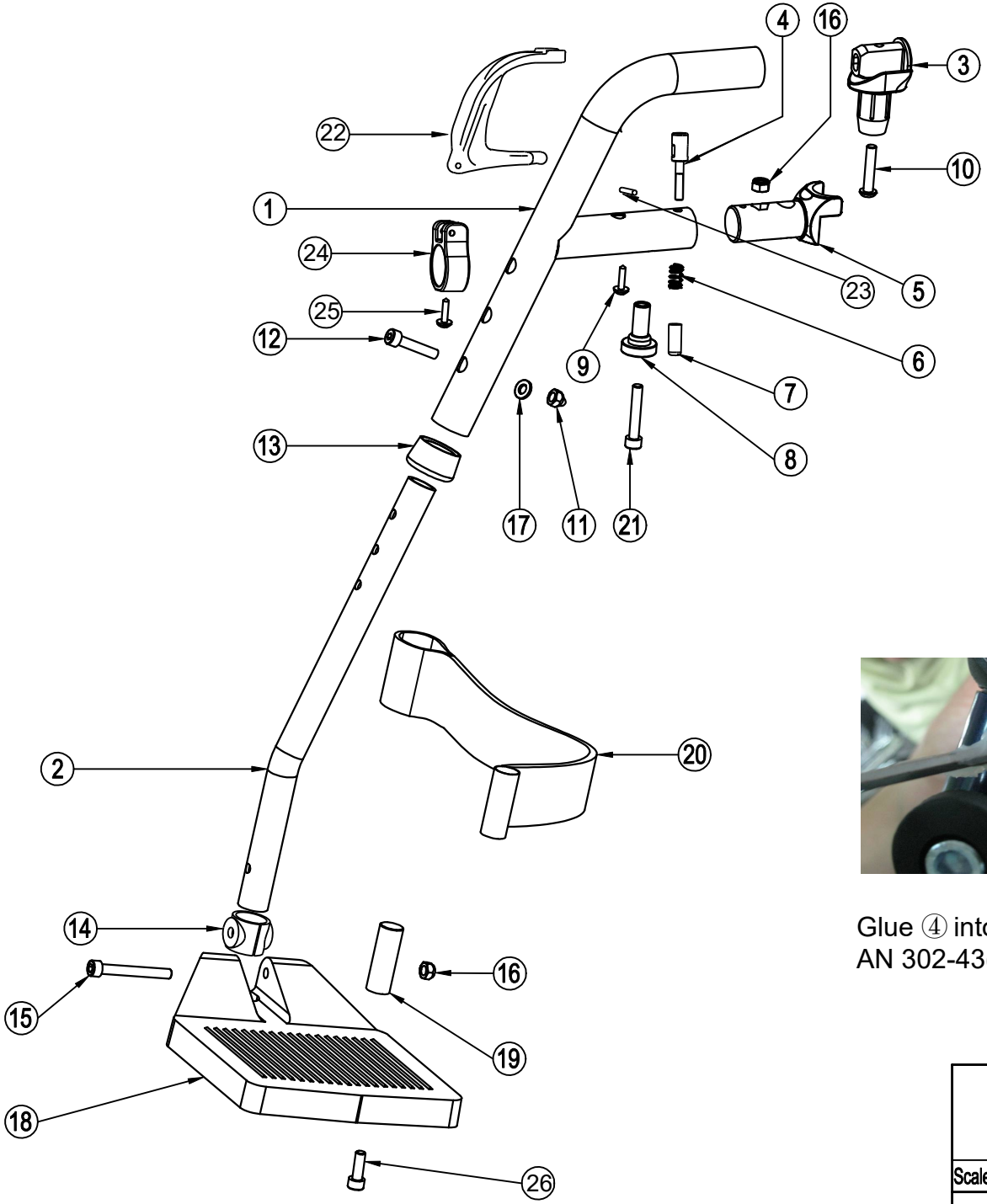

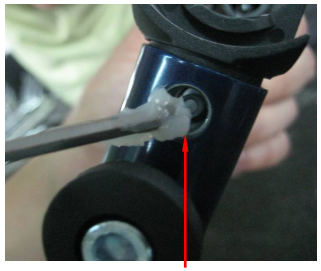

Glue ④ into ⑦ with weicon
AN 302-43(H900009)

Material			
NO.	Plan	Article	Number
1	YC00893	1C307	2
2	YC00394	1C17500	2
3	XC00132	3990518	2
4	XC00305	3991094	2
5	XC00129	3990491	2
6	XC00142	3990576	2
7	XC00304	3991093	2
8	X004660	1905195	2
9	---	H016007	2
10	---	1009588	2
11	---	1008492	2
12	---	1992721	2
13	XC00124	3990459	2
14	XC00183	3992471	2
15		1908726	2
16	---	1001680	4
17	---	1001564	2
18	XC00156 (38#)	3991001	2
	X002102 (39-44#)	1004824	2
	X001740 (46-52#)	1004822	2
19	XC00134	3992885	2
20	（38-44#）	1992802	2
	（46-52#）	1992803	2
21	---	1001496	2
22	X004418	1904207	2
23	---	1905640	2
24	XC00300	3991091	2
25	---	1992805	2
26	---	1001493	2

FOOTREST FOR D100				Plan No. / Plannr.
				EC00148/I
Scale / Schaal: 1 : 4	Drafted / Getekend	Verified / Nagezien	Confirmed / Bevestigd	VERMEIREN
Date / Datum	15/07/2013	13/08/2020	13/08/2020	
Init. / Init.	Lydia	AL	TG	

EC00148/I

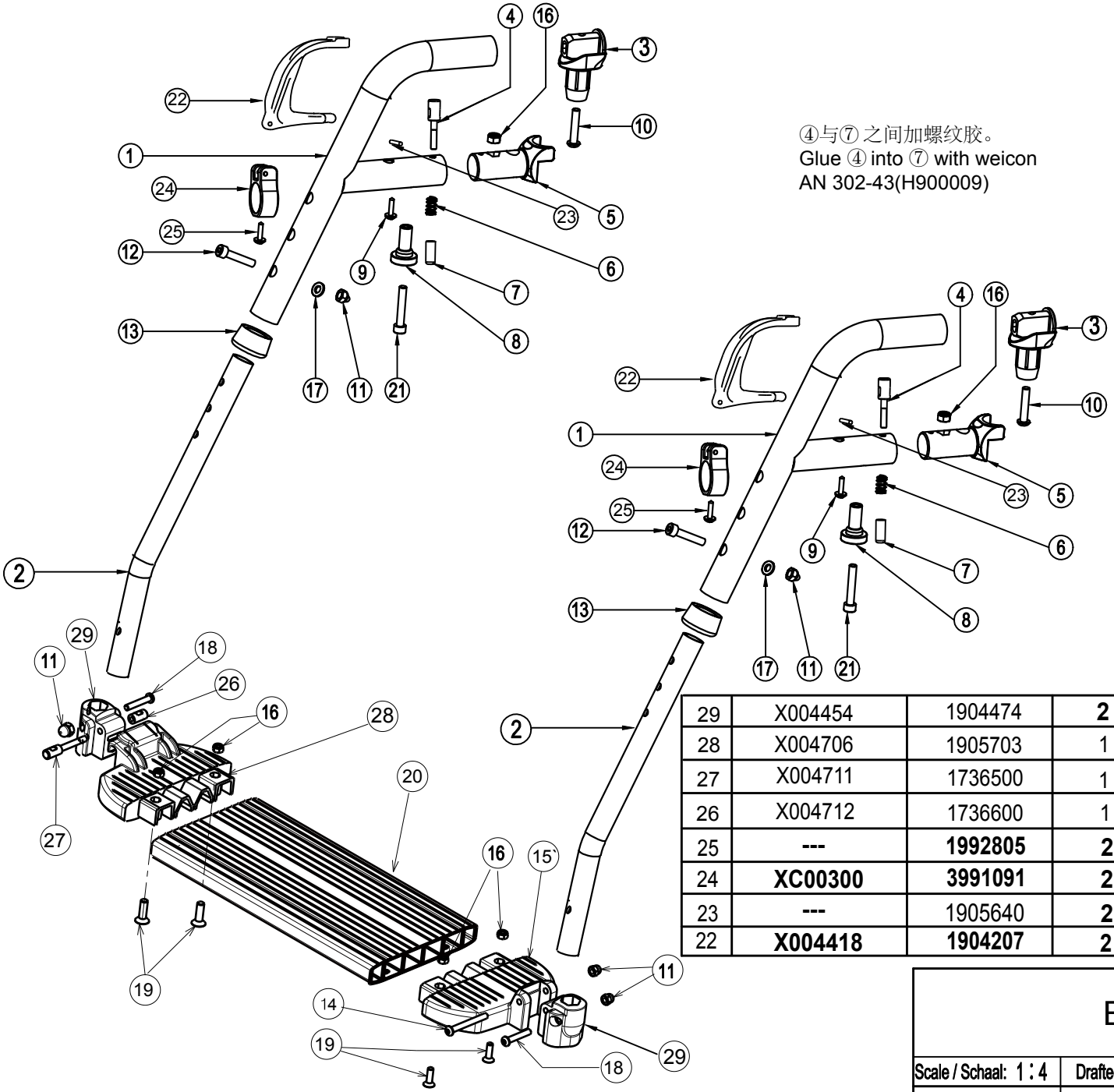

Material			
NO.	Plan	Article	Number
1	YC00893	1C307	2
2	YC00394	1C17500	2
3	XC00132	3990518	2
4	XC00305	3991094	2
5	XC00129	3990491	2
6	XC00142	3990576	2
7	XC00304	3991093	2
8	X004660	1905195	2
9	---	H016007	2
10	---	1009588	2
11	---	1008492	5
12	---	1992721	2
13	XC00124	3990459	2
14	---	1997879	1
15	X004706	1905704	1
16	---	1001680	6
17	---	1001564	2
18	---	1006057	2
19	---	1903081	4
20	XC00307	1C30432(38)	1
29	X004454	1904474	2
28	X004706	1905703	1
27	X004711	1736500	1
26	X004712	1736600	1
25	---	1992805	2
24	XC00300	3991091	2
23	---	1905640	2
22	X004418	1904207	2
	XC00308	1C30532(40)	1
	Y017210	1742932(42)	1
	Y017211	1743032(44)	1
	Y017212	1743132(46)	1
	Y017213	1743232(48)	1
	Y017214	1743332(50)	1
	XC00309	1C30632(52)	1
21	---	1001496	2

BK6 TYPE D100				Plan No. / Plannr.
				EC00171/A
Scale / Schaal: 1 : 4	Drafted / Getekend	Verified / Nagezien	Confirmed / Bevestigd	
Date / Datum	17/06/2013	17/06/2013	17/06/2013	
Init. / Init.	JC	JJQ	TG	

EC00171/A

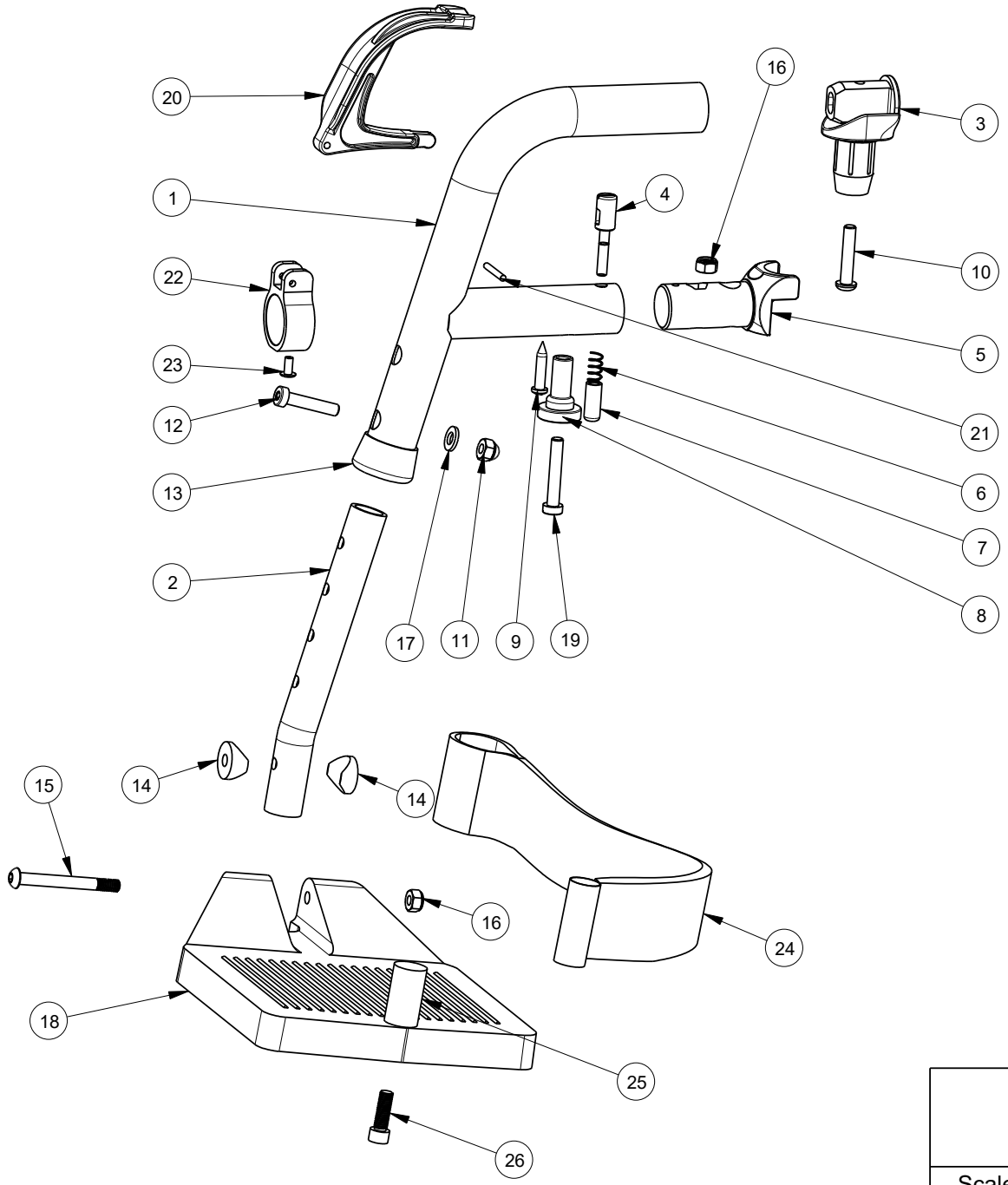

Material			
No.	Plan	Article	Number
1	YC01607	1C537	2
2	YC01603	1C536	2
3	XC00132	3990518	2
4	XC00305	3991094	2
5	XC00129	3990491	2
6	XC00142	3990576	2
7	XC00304	3991093	2
8	X004660	1905195	2
9	---	H016007	2
10	---	1009588	2
11	---	1008492	2
12	---	1992721	4
13	XC00124	3990459	2
14	X000586	1005742	4
15	---	3990514	2
16	---	1001680	4
17	---	1001564	2
18	XC00156(38#)	3991001	2
	X002102(39-44#)	1004824	2
	X001740(46-52#)	1004822	2
19	---	1903903	2
20	X004418	1904207	2
21	---	1905640	2
22	XC00300	3991091	2
23	---	1992805	2
24	38-44#	1992802	1
	46-52#	1992803	1
25	XC00134	3992885	2
26	---	1001493	2

BA6 FOOTREST FOR D&V-SERIS				Plan No.
				EC00305/B
Scale:3:10	Drafted	Verified	Confirmed	VERMEIREN
Date	12/10/2015	21/08/2018	21/08/2018	
Init.	SL	Mars	TG	

EC00305/B

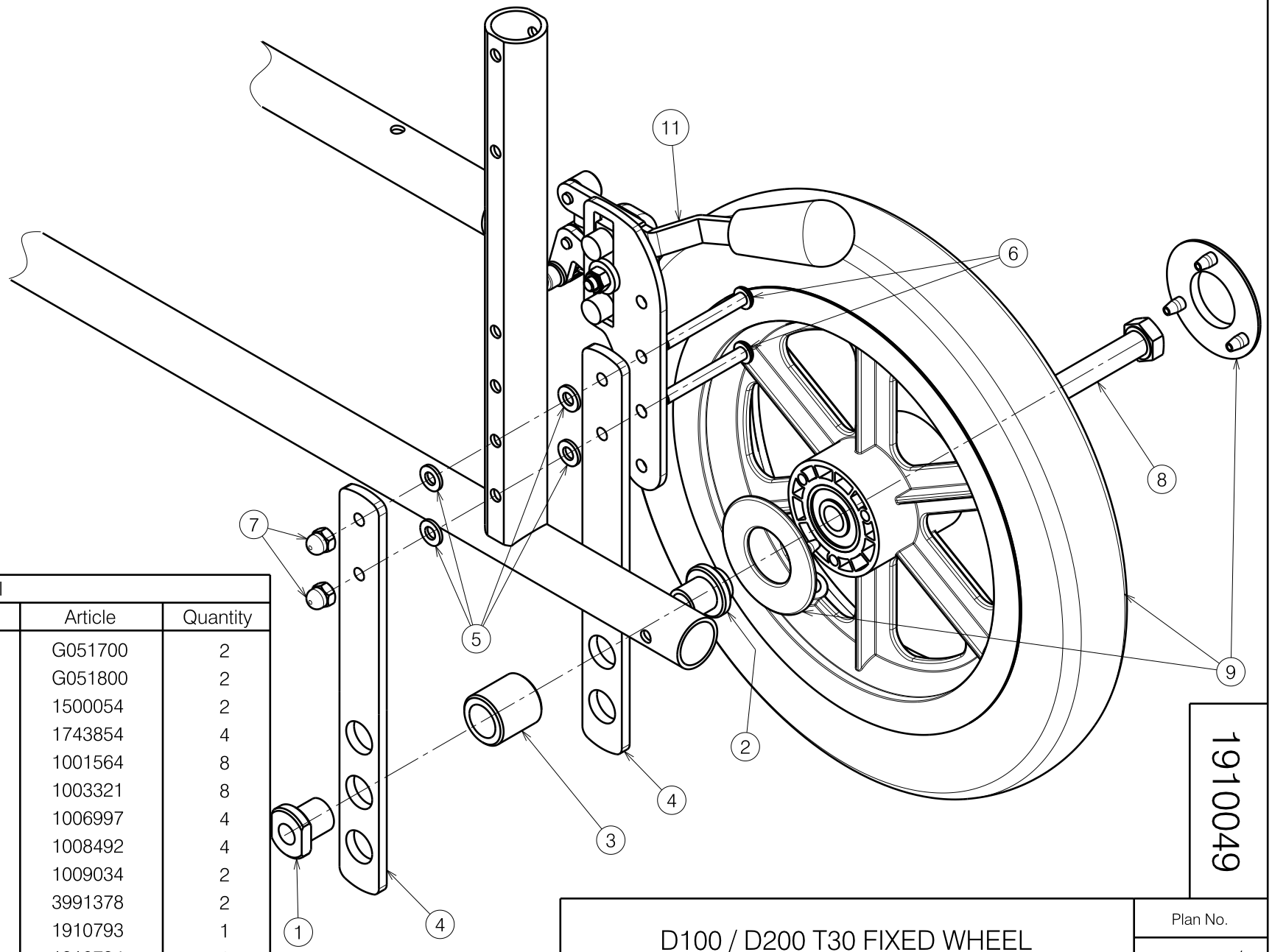

Material			
No.	Plan	Article	Quantity
1	X001308	G051700	2
2	X001309	G051800	2
3	X002265	1500054	2
4	Y017193	1743854	4
5	M6 DIN125 (For D200)	1001564	8
	M6 DIN7349 (For D100)	1003321	8
6	M6x50 ISO7380	1006997	4
7	M6	1008492	4
8	M12x100 DIN931	1009034	2
9	---	3991378	2
10*	Left	1910793	1
11	Right	1910794	1

* Not depicted

E000969 / D

1910049

D100 / D200 T30 FIXED WHEEL				Plan No.
				E000969 / D
Scale: 2:5	Drafted	Verified	Confirmed	
Date	03/10/2014	22/12/2014	22/12/2014	
Initials	SD	TT	PJ	

VERMEIREN

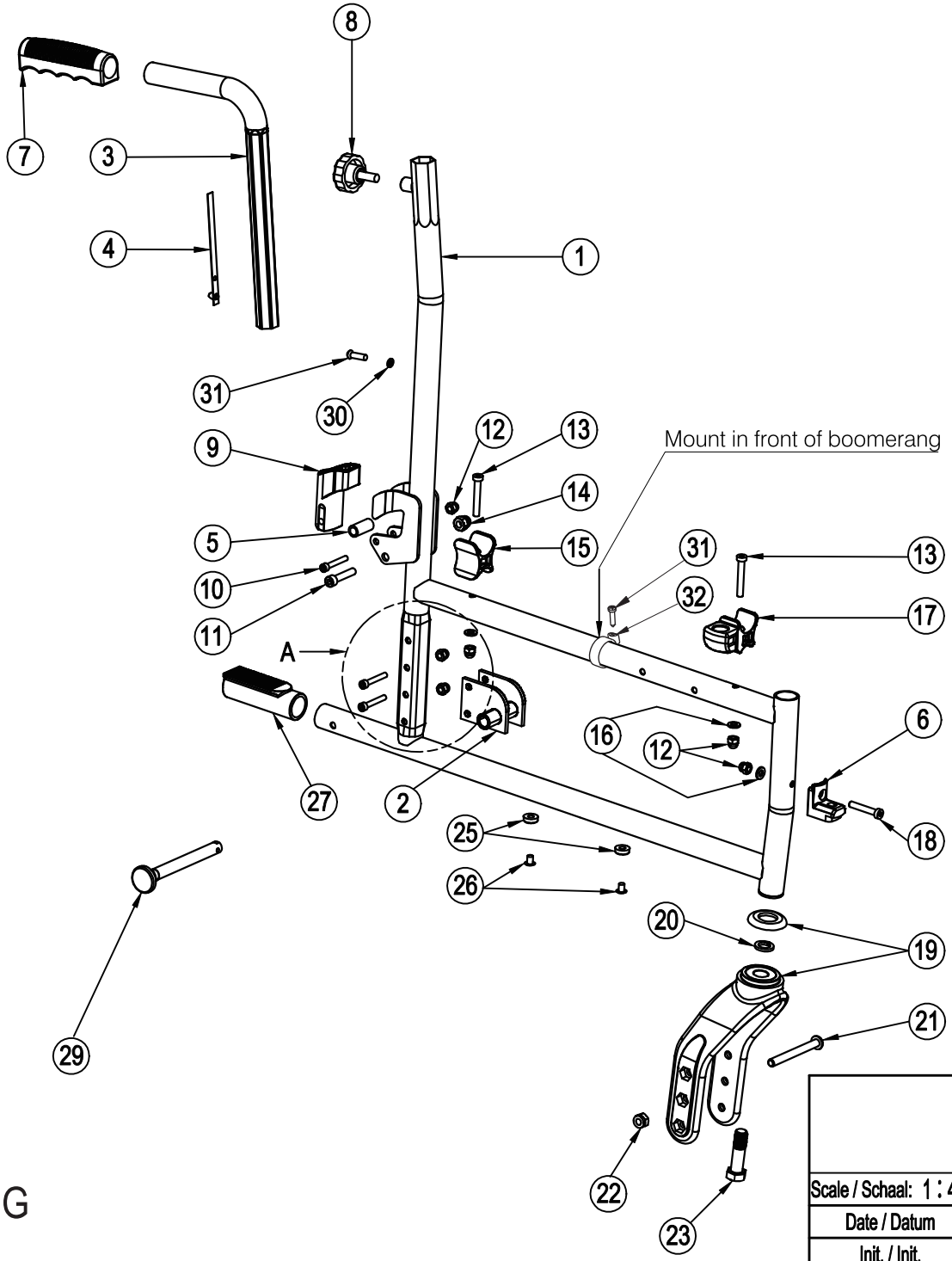

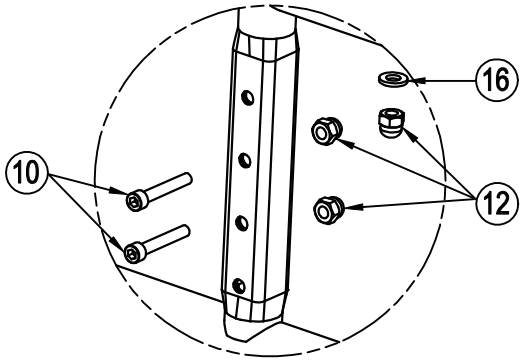

Detail A
Scale: 2X

EC00070/G

SIDE FRAME FOR D100 1/2				Plan No. / Plannr.
				EC00070/G
Scale / Schaal: 1 : 4	Drafted / Getekend	Verified / Nagezien	Confirmed / Bevestigd	
Date / Datum	07/26/2012	24/08/2020	24/08/2020	
Init. / Init.	Lydia	AL	TG	

Material			
NO.	Plan	Article	Number
1	YC00419(L)	1C184	1
	YC00420(R)	1C185	1
2	YC00426(L)	1C18654	1
	YC00417(R)	1C18354	1
3	Y006560	1575054	2
4	Y006559	1995662	2
5	XC00153	1C21400	2
6	X004415	17193	2
7	---	3990041	2
8	---	1001580	2
9	X004487	1904581	2
10	---	1003909	8
11	---	1001500	2
12	---	1008492	12
13	---	1006850	4
14	---	1902024	2
15	X004309	1904133	2
16	---	1001564	8
17	X004420	1904134	2
18	---	1903903	2
19	---	3990495	2

Material			
NO.	Plan	Article	Number
20	---	1001572	2
21	---	1998993	2
22	---	1998994	2
23	---	1990507	2
24			
25	X004973	1907519	4
26	---	1992835	4
27	X004469	1905045	2
28			
29	XC00037	3990106	2
30	---	1001550	2
31	---	1003021	4
32	XC00234	3993197	2

EC00070/G

SIDE FRAME FOR D100 2/2				Plan No. / Plannr.
				EC00070/G
Scale / Schaal: 1 : 4	Drafted / Getekend	Verified / Nagezien	Confirmed / Bevestigd	VERMEIREN
Date / Datum	26/07/2012	24/08/2020	24/08/2020	
Init. / Init.	Lydia	AL	TG	

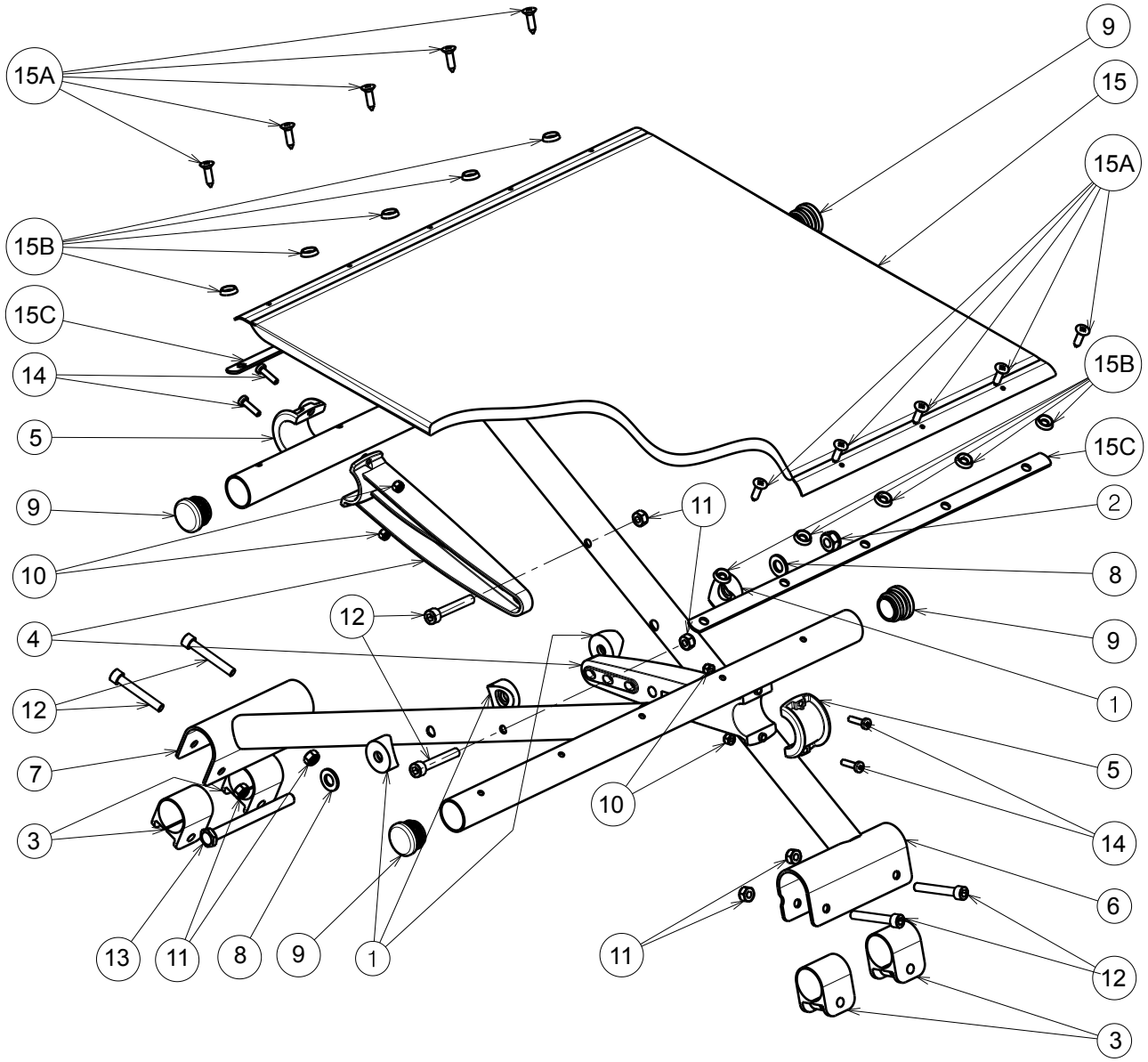

CROSS D100				Plan No. / Plannr.
				EC00071/C
Scale / Schaal: 1:5	Drafted / Getekend	Verified / Nagezien	Confirmed / Bevestigd	VERMEIREN
Date / Datum	20/10/2014	20/10/2014	20/10/2014	
Init. / Init.	Betty	JJQ	TG	

EC00071/C

Material / Materiaal			
No. / Nr.	Plan	Article / Artikel	Quantity / Aantal
1	X000106	G003218	4
2	X001016	1001682	1
3	X003692	1998763	4
4	Y018378	F006644(38)	2
	X004606	1905091 (44/48)	2
	Y018379	F006645(40)	2
	X004607	1905092 (42/46/50)	2
	X005002	1907928(52)	2
5	X004620	1905090	2
6	YC00399	1C17754(38)	1
	YC00402	1C17954(40)	1
	Y015085	1727554 (42)	1
	Y015565	1724354 (44)	1
	Y015087	1727354 (46)	1
	Y015744	1727154 (48)	1
	Y015746	1726354 (50)	1
	YC00406	1C18154(52)	1
7	YC00400	1C17854(38)	1
	YC00403	1C18054(40)	1
	Y015086	1727654 (42)	1
	Y015006	1724454 (44)	1
	Y015088	1727454 (46)	1
	Y015745	1727254 (48)	1
	Y015747	1726454 (50)	1
	YC00407	1C18254(52)	1
8	X001119	1001554	2
9	---	1001608	4
10	---	1001678	4
11	---	1001680	6
12	---	1003909	6
13	---	1911090	1
14	---	2990185	4

Material / Materiaal			
No. / Nr.	Plan	Article / Artikel	Quantity / Aantal
15	---	3990501 (38)	1
	---	3990502 (40)	1
	---	3991678 (42)	1
	---	3991679 (44)	1
	---	3991680 (46)	1
	---	3991681 (48)	1
	---	3991682 (50)	1
	---	3990503 (52)	1
15A	---	1001534	10
15B	X001473	1002994	10
15C	Y000439	H000013	2

EC00071/C

CROSS D100				Plan No. / Plannr.
				EC00071/C
Scale / Schaal: 1:5	Drafted / Getekend	Verified / Nagezien	Confirmed / Bevestigd	VERMEIREN
Date / Datum	20/10/2014	20/10/2014	20/10/2014	
Init. / Init.	Betty	JJQ	TG	

Type	Product Article	Name	Article	Number	Unit
38	3990501	Sponge	1998830	1	ST
		Nylon	1008943	0.28	M
		Canvas	1998716	0.13	LM
		Steel Bar	H000013	2	ST
		Tapping Screw	1001534	10	ST
		Washer black	1002994	10	ST
40	3990502	Sponge	3990507	1	ST
		Nylon	1008943	0.29	M
		Canvas	1998716	0.135	LM
		Steel Bar	H000013	2	ST
		Tapping Screw	1001534	10	ST
		Washer black	1002994	10	ST
42	3991678	Sponge	1998831	1	ST
		Nylon	1008943	0.31	M
		Canvas	1998716	0.14	LM
		Steel Bar	H000013	2	ST
		Tapping Screw	1001534	10	ST
		Washer black	1002994	10	ST
44	3991679	Sponge	1998832	1	ST
		Nylon	1008943	0.32	M
		Canvas	1998716	0.147	LM
		Steel Bar	H000013	2	ST
		Tapping Screw	1001534	10	ST
		Washer black	1002994	10	ST
46	3991680	Sponge	1998833	1	ST
		Nylon	1008943	0.34	M
		Canvas	1998716	0.154	LM
		Steel Bar	H000013	2	ST
		Tapping Screw	1001534	10	ST
		Washer black	1002994	10	ST
48	3991681	Sponge	1998835	1	ST
		Nylon	1008943	0.35	M
		Canvas	1998716	0.16	LM
		Steel Bar	H000013	2	ST
		Tapping Screw	1001534	10	ST
		Washer black	1002994	10	ST
50	3991682	Sponge	1998837	1	ST
		Nylon	1008943	0.36	M
		Canvas	1998716	0.167	LM
		Steel Bar	H000013	2	ST
		Tapping Screw	1001534	10	ST
		Washer black	1002994	10	ST
52	3990503	Sponge	3990508	1	ST
		Nylon	1008943	0.37	M
		Canvas	1998716	0.175	LM
		Steel Bar	H000013	2	ST
		Tapping Screw	1001534	10	ST
		Washer black	1002994	10	ST

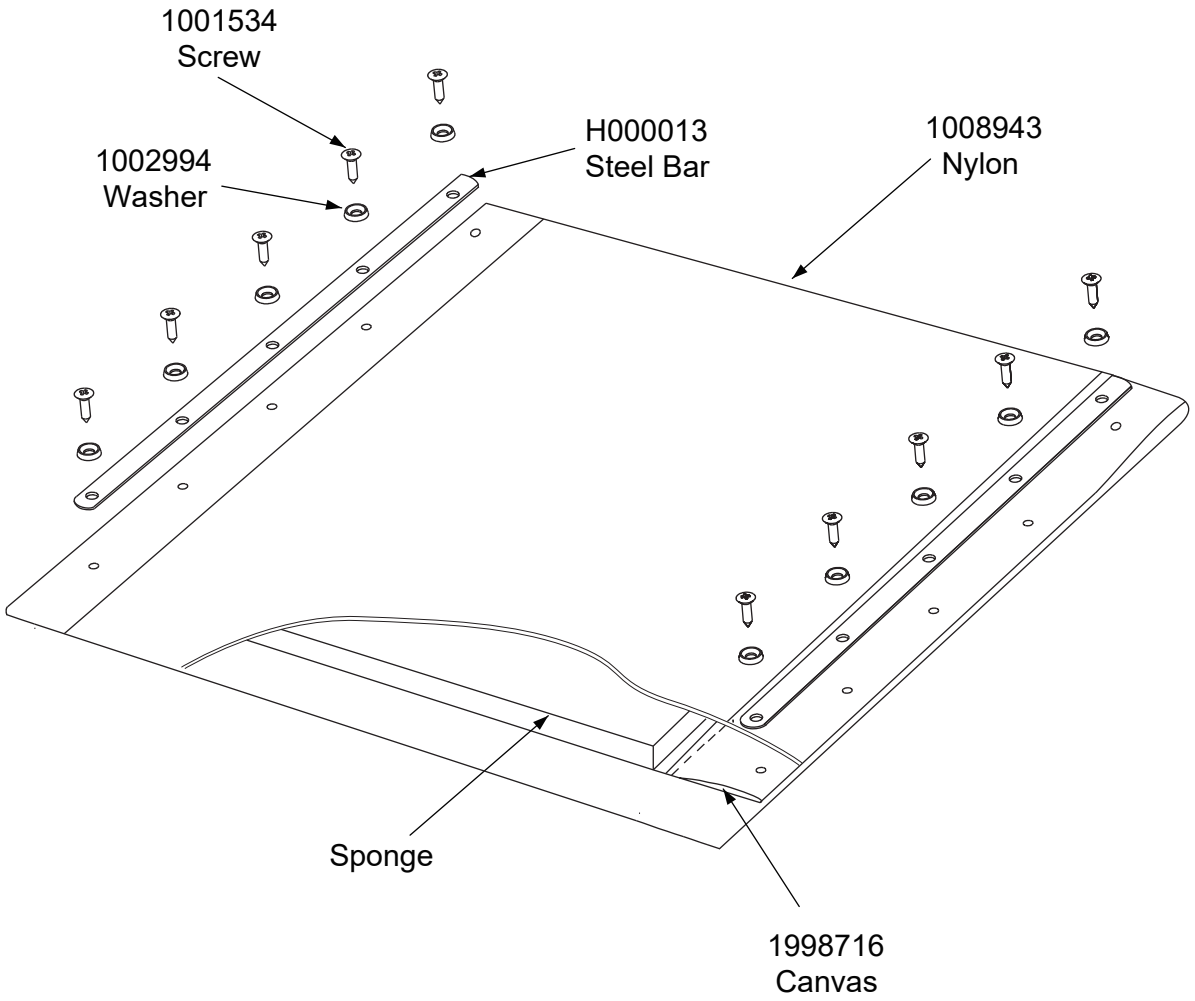

Tolerance	
Value	Tol:
X>0≤50	±0.1
X>50≤100	±0.2
X>100≤150	±0.3
X>150≤500	±0-1
x>500	±1

EC00443/A

SEAT D100 BLACK NYLON

STEP 1/2

Plan No. EC00443/A

No.	Requested by	Change description	Date	Init.
3				
2				
1				

Scale:1:4	Drafted	Verified	Confirmed
Date	27/11/2018	27/11/2018	27/11/2018
Init.	Anna	Mars	TG

VERMEIREN

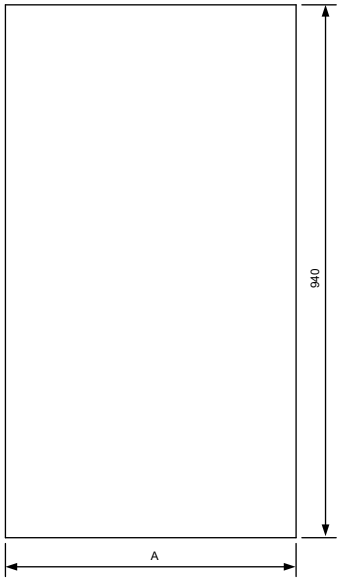

Cuting the shape of Nylon.

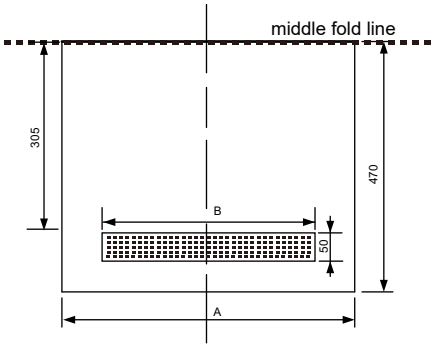

Folding from middle and stitching the velcro.

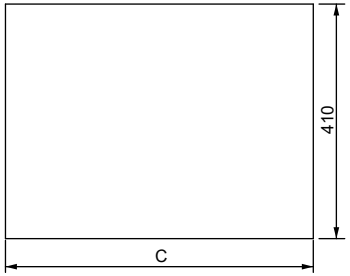

Cuting the shape of Canvas.

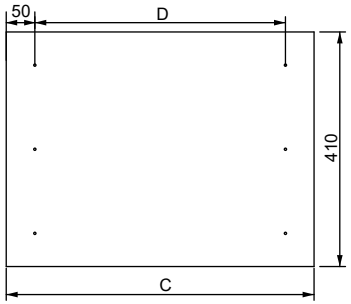

Drilling holes for bend by C525049.

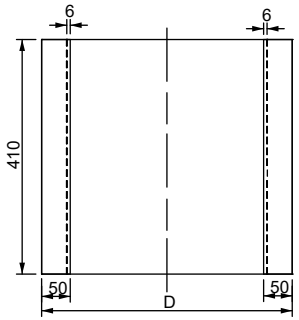

Stitching.

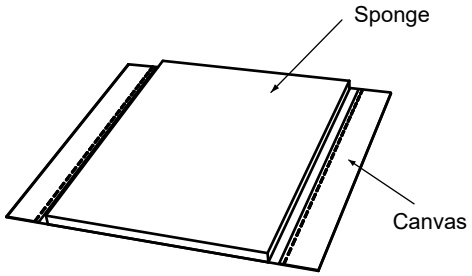

Paste Sponge and Canvas use 1999774

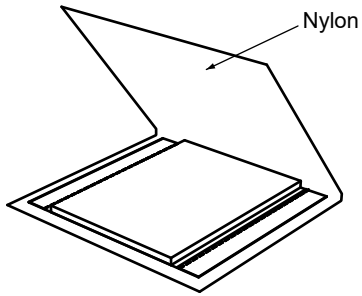

Cover by Nylon.

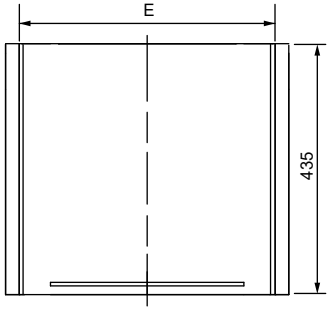

High frequency welding.
By matrix: C400254 38#
C400255 40#
C400243 42#
C400244 44#
C400245 46#
C400246 48#
C400247 50#
C400256 52#

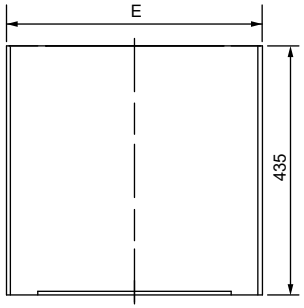

Cut off the excess part along the weld line.

Type	38#	40#	42#	44#	46#	48#	50#	52#
A	435	455	475	495	515	535	555	575
B	270	300	320	340	360	380	400	420
C	483	503	523	543	563	583	603	623
D	383	403	423	443	463	483	503	523
E	397	417	437	457	477	497	517	537
F	365	385	405	425	445	465	485	505

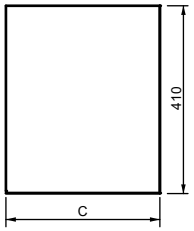

Sponge（1.5cm）

Tolerance	
Value	Tol:
X>0≤50	±0.1
X>50≤100	±0.2
X>100≤150	±0.3
X>150≤500	±0-1
x>500	±1

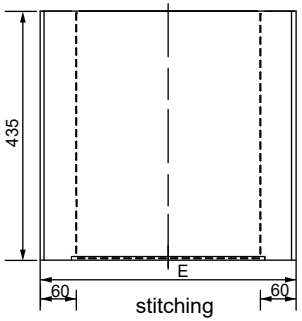

stitching

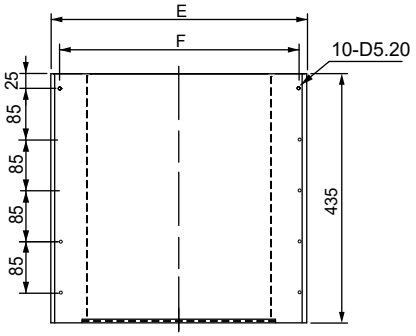

Punching the holes
By C200874.

EC00443/A

SEAT D100 BLACK NYLON

STEP 2/2

Plan No.

EC00443/A

No.	Requested by	Change description	Date	Init.
3				
2				
1				

Scale:1:4	Drafted	Verified	Confirmed
Date	27/11/2018	27/11/2018	27/11/2018
Init.	Anna	Mars	TG

VERMEIREN

no.	description	art.no.
1.	WHEEL 150X30 PU DG (60) A3 32-86	1914611

1914611

WHEEL 150X30 PU DG (60) A3 32-86				Plan No. / Plan nr.
				EF00001/A
	Drafted	Verified	Confirmed	
Date	22/06/2020	22/06/2020	22/06/2020	
Init.	LG	SD	SD	

EF00001/A

no.	description	art.no.
1.	WHEEL 140X40 PU DG B3 40-60	1914613

1914613

WHEEL 140X40 PU DG B3 40-60				Plan No. / Plan nr.
				EF00003/A
	Drafted	Verified	Confirmed	
Date	22/06/2020	22/06/2020	22/06/2020	
Init.	LG	SD	SD	

EF00003/A

no.	description	art.no.
	WHEEL 200X50 AIR DG 50-94	1915824
1	DISK WHEEL 200X50 PLASTIC FOR AIR TYRE	3990410
2	TIRE 200X50 DG 50-94	3993164
3	INNER TUBE 200X50 MOTO-VALVE	1001263

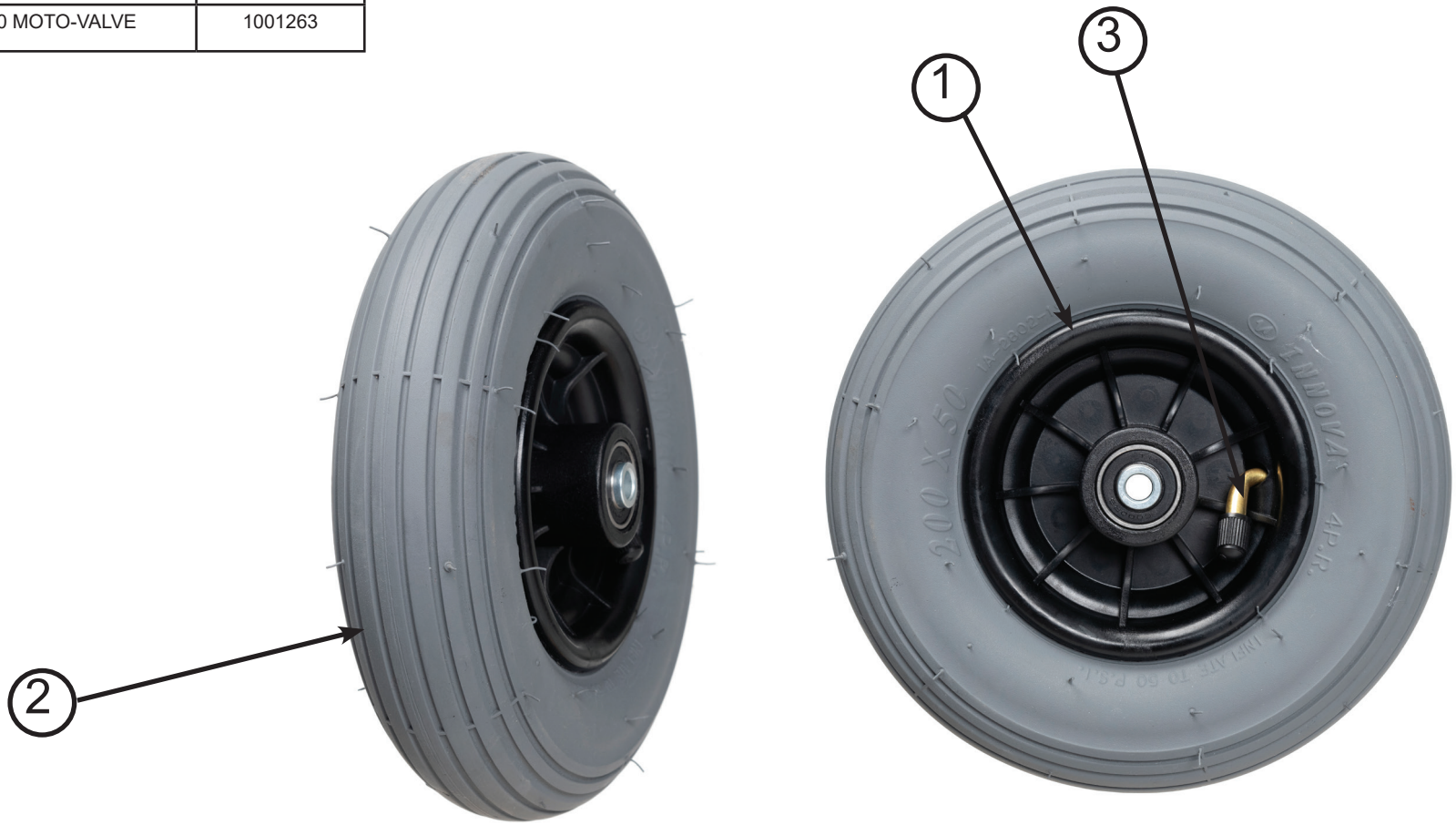

1915824

EF00006/A

WHEEL 200X50 AIR DG 50-94				Plan No. / Plan nr.
				EF00006/A
	Drafted	Verified	Confirmed	
Date	22/06/2020	22/06/2020	22/06/2020	
Init.	LG	SD	SD	

no.	description	art.no.
	WHEEL 24”B74 PU DG D12 D3 37-540	1914614

1914614

WHEEL 24”B74 PU DG D12 D3 37-540				Plan No. / Plan nr.
				EF00007/A
	Drafted	Verified	Confirmed	
Date	22/06/2020	22/06/2020	22/06/2020	
Init.	LG	SD	SD	

EF00007/A

no.	description	art.no.
1.	WHEEL 22”B74 PU DG D12 D3 37-501	1914615

1914615

WHEEL 22”B74 PU DG D12 D3 37-501				Plan No. / Plan nr.
				EF00008/A
	Drafted	Verified	Confirmed	
Date	25/06/2020	25/06/2020	25/06/2020	
Init.	LG	SD	SD	

EF00008/A

no.	description	art.no.
	WHEEL 24” AIR DG D12 37-540	1915823
1	RIM 24”X1 3/8, 28H, 4SLOTST	3990339
2	TIRE 24”X1”3/8 DG D12 37-540	3993163
3	INNER TUBE 24”X1”3/8 MOTO VALVE	1001296

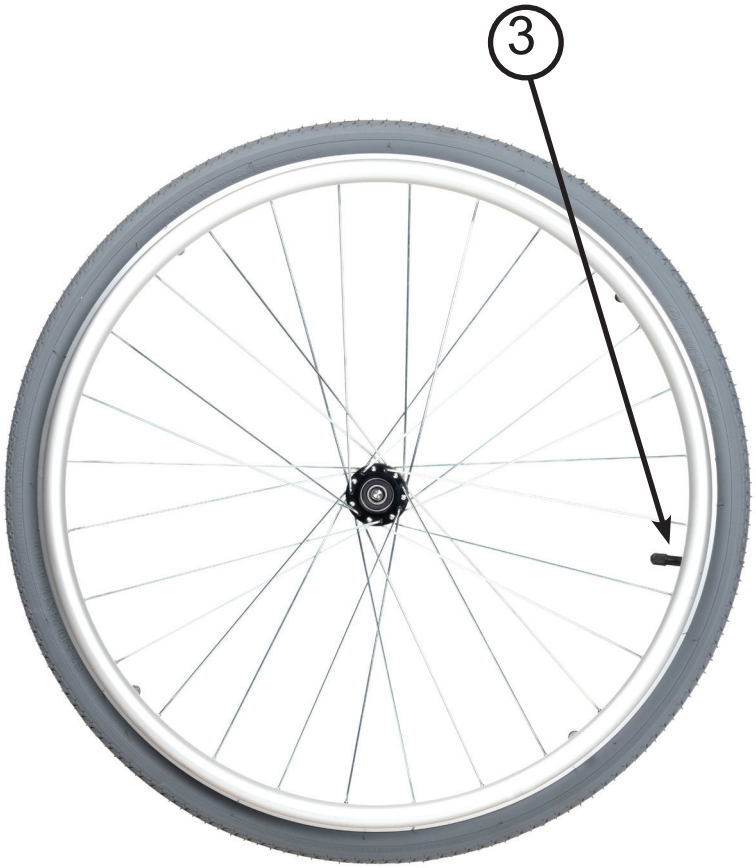

1915823

WHEEL 24” AIR DG D12 37-540				Plan No. / Plan nr.
				EF00009/A
	Drafted	Verified	Confirmed	
Date	06/07/2020	06/07/2020	06/07/2020	
Init.	LG	SD	SD	

EF00009/A

no.	description	art.no.
1.	WHEEL 12”B74L PU DG E3 62-203	1914619

1914619

WHEEL 12”B74L PU DG E3 62-203				Plan No. / Plan nr.
				EF00014/A
	Drafted	Verified	Confirmed	
Date	11/08/2020	11/08/2020	11/08/2020	
Init.	LG	SD	SD	

EF00014/A

no.	description	art.no.
1.	WHEEL 12”B74R PU DG E3 62-203	1914620

1914620

WHEEL 12”B74R PU DG E3 62-203				Plan No. / Plan nr.
				EF00015/A
	Drafted	Verified	Confirmed	
Date	11/08/2020	11/08/2020	11/08/2020	
Init.	LG	SD	SD	

EF00015/A

no.	description	art.no.
1	WHEEL 24” PU DG D12 D3 37-540	1914602

1914602

WHEEL 24” PU DG D12 D3 37-540				Plan No.
				EF00113/A
	Drafted	Verified	Confirmed	
Date	25/08/2020	25/08/2020	25/08/2020	
Init.	LG	SD	SD	

EF00113/A

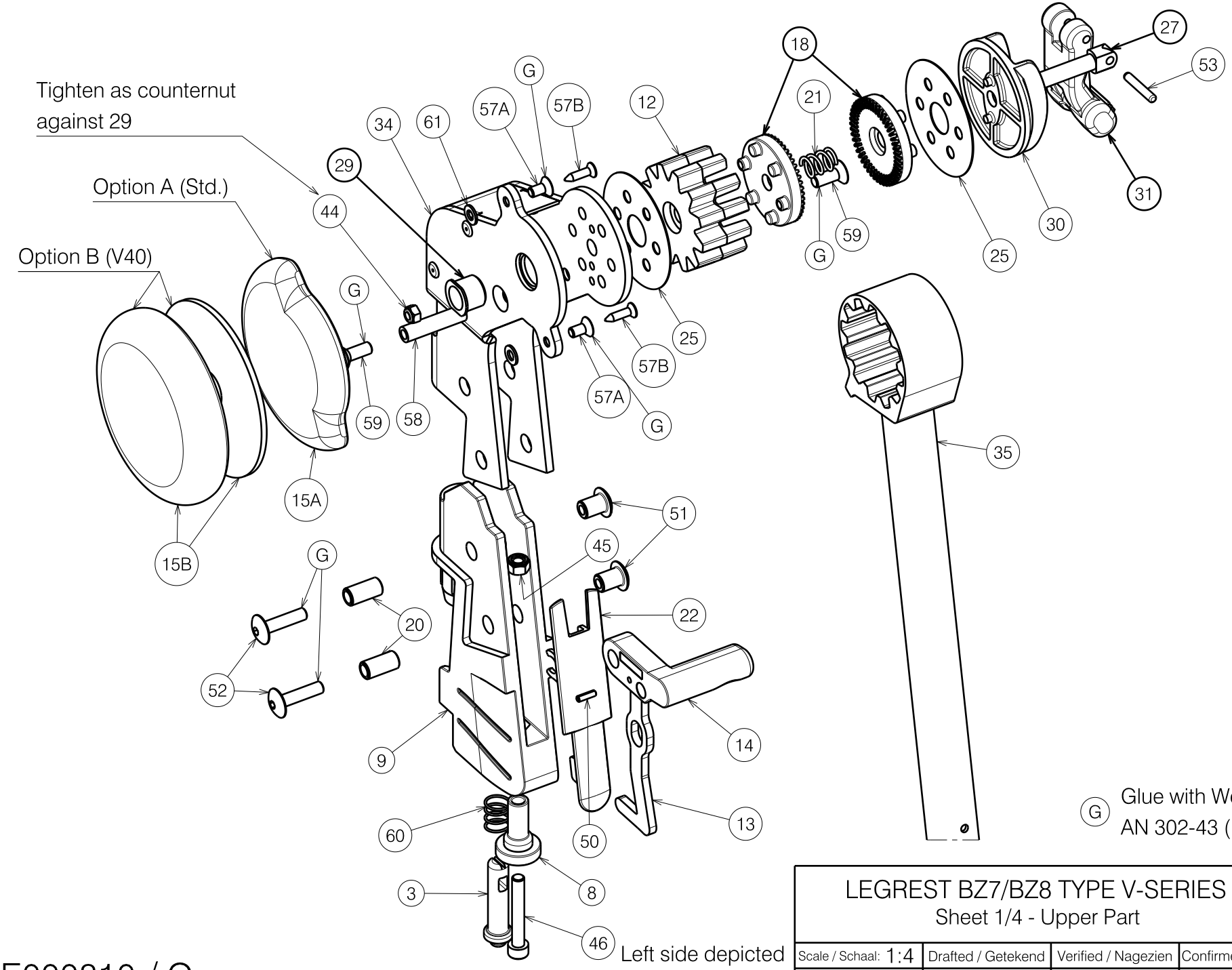

1909057

LEGREST BZ7/BZ8 TYPE V-SERIES 2020 Sheet 1/4 - Upper Part				Plan No. / Plannr. E000810 / O
Scale / Schaal: 1:4	Drafted / Getekend	Verified / Nagezien	Confirmed / Bevestigd	
Date / Datum	13/07/2012	14/10/2020	14/10/2020	
Init. / Init.	JG	SD	PJ	

E000810 / O

Replaces E000635

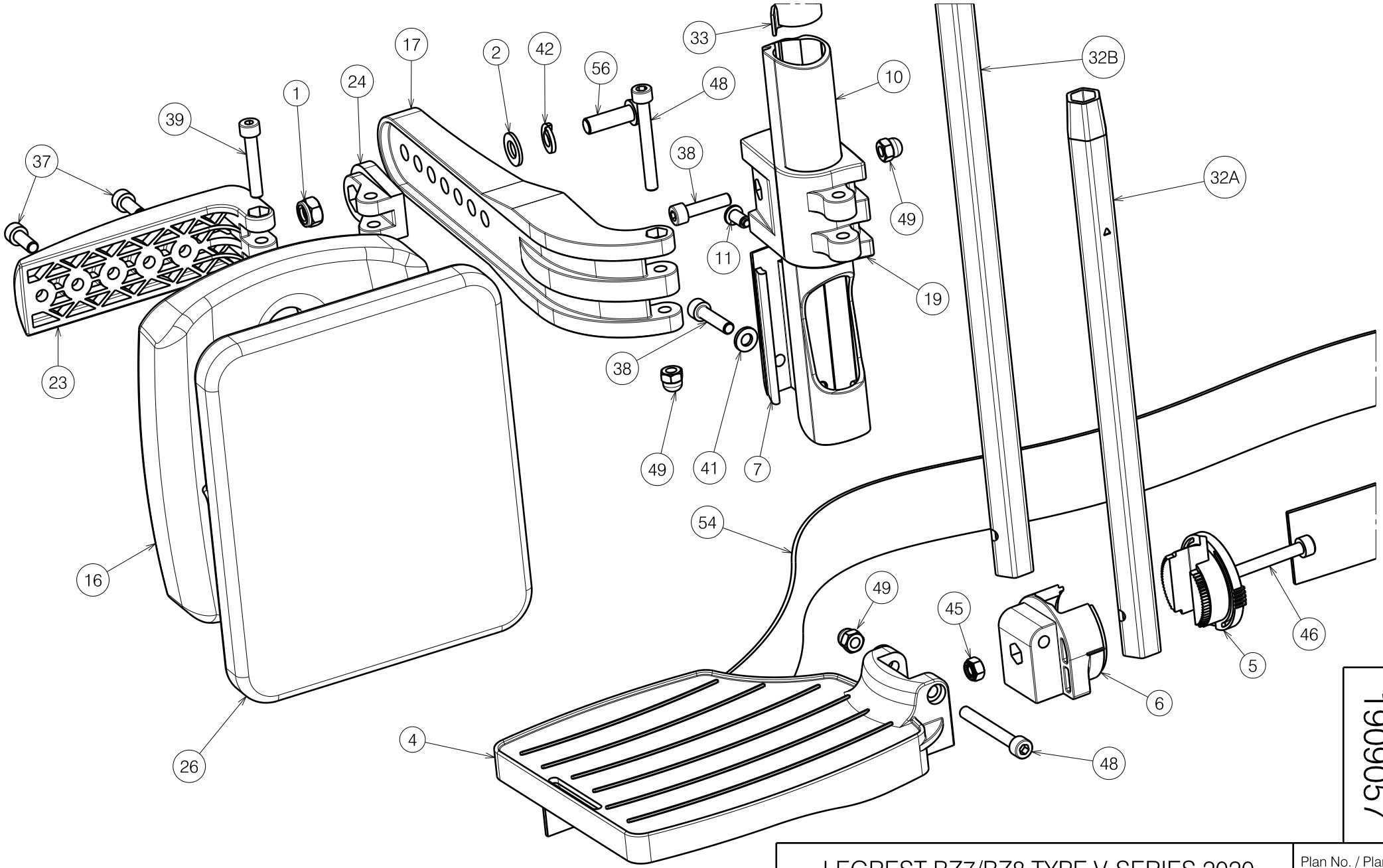

1909057

LEGREST BZ7/BZ8 TYPE V-SERIES 2020 Sheet 2/4 - Lower Part				Plan No. / Plannr. E000810/ O
Scale / Schaal: 1:4	Drafted / Getekend	Verified / Nagezien	Confirmed / Bevestigd	VERMEIREN
Date / Datum	13/07/2012	14/10/2020	14/10/2020	
Init. / Init.	JG	SD	PJ	

Left side depicted

E000810 / O

Replaces E000635

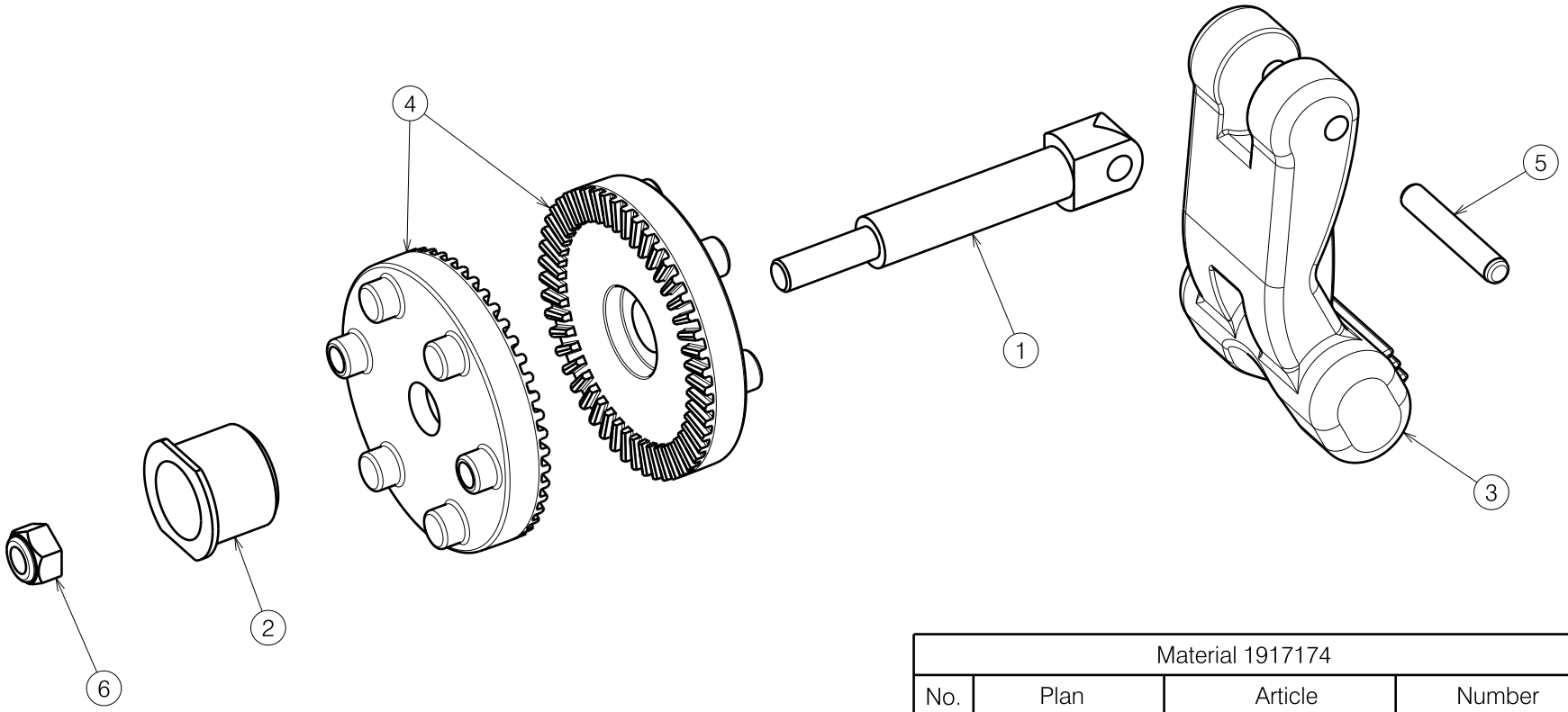

Material 1917174			
No.	Plan	Article	Number
1	X005028	G103900	1
2	X005046	G103800	1
3	X005055	1917169	1
4	X005880	1915832	2
5	G0409	G0409	1
6	1001679	1001679	1

Quantities are for one side

1917174

LEGREST BZ7/BZ8 TYPE V-SERIES 2020

Sheet 3/4 - Replacement kit

Plan No. / Plannr.

E000810/ O

Scale / Schaal: 1:4	Drafted / Getekend	Verified / Nagezien	Confirmed / Bevestigd
Date / Datum	13/07/2012	14/10/2020	14/10/2020
Init. / Init.	JG	SD	PJ

VERMEIREN

E000810 / O

Material

No.	Plan	Article	Quantity
1	X001016	1001682	1
2	X001119	1001554	2
3	X004417	1719200	1
4	X004570	1904646 (L)	(39-42) 1
	X004571	1904647 (R)	(39-42) 1
	X004457	1904475 (L)	(44-46) 1
	X004453	1904210 (R)	(44-46) 1
	X004572	1904648 (L)	(48-50) 1
	X004573	1904649 (R)	(48-50) 1
5	X004464	1904212	1
6	X004465	1904213	1
7	X004658	1904968	1
8	X004660	1905195	1
9	X004665	1905744	1
10	X004666	1905731	1
11	X004687	1905639	1
12	X004690	1905735	1
13	X004692	1906013	1
14	X004701	1905737 (L)	1
	X004710	1905738 (R)	1
15A	X004713	1905734	1
15B	Y021864	F007208	0.5
16	X004733	1905733 (M)	(46-48-50) 1
	X004785	1905949 (S)	(39-42-44) 1
17	X004735	1905732	1
18	X005880	1915832	2
19	X004739	1905739	1
20	X004742	1739500	2
21	X004744	1737100	1
22	X004773	1905885	1
23	X004784	1905950	1
24	X004787	1905947	1
25	X004795	1905970	2
26*	X004911	1907230 (S)	1
	X004912	1907232 (M)	1
27	X005028	G103900	1

No.	Plan	Article	Quantity
29	X005046	G103800	1
30	X005047	1908420	1
31	X005055	1917169	1
32A	Y016499	F006269 (BZ8)	1
32B	Y017321	F006420 (BZ7)	1
33	Y016501	1733500	1
34	Y018551	1771654 (L)	1
	Y018552	1771554 (R)	1
35	Y018568	1771754	1
37	M6x16 DIN912	1001492	2
38	M6x25 DIN912	1001494	2
39	M6x35 DIN912	1001496	1
41	M6 DIN125A	1001564	1
42	M8 DIN127A	1001570	1
44	M5 DIN985	1001679	1
45	M6 DIN985	1001680	3
46	M6x40DIN912	1003909	2
48	M6x50 DIN912	1007970	2
49	M6x12mm	1008492	3
50	---	1008674	1
51	M6 Type RT	1905500	2
52	M6x25 Type KT	1905501	2
53	Φ4x24 DIN6325	G0409	1
54	---	1905642	1
56	M8x25	1990501	1
57A	M5x10 DIN7991	1999977	2
57B	Φ3.9x16 DIN7982	1005767	2
58	X005025	1772000	1
59	M6x16 DIN7991	1994752	2
60	X004423	1717300	1
61	M5 DIN125	1001550	2

Option A: Knee protector PU

Option B: Knee protector V40

* Calf rest cushions are optional

Option B complete:

E001015, art. 1912112

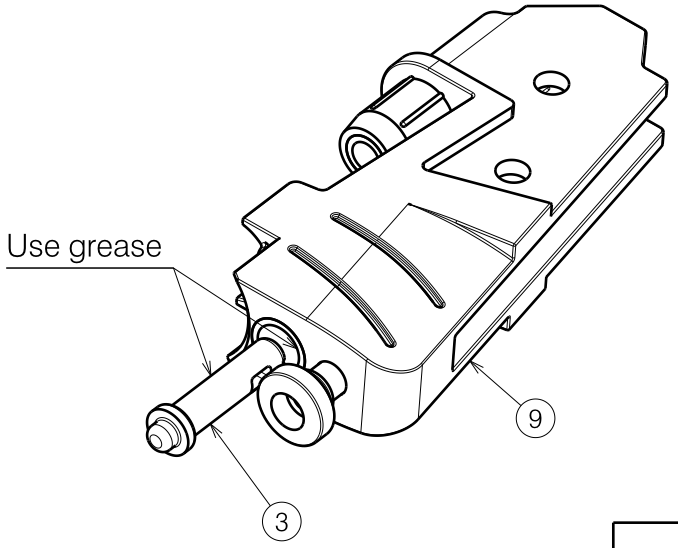

1909057

E000810 / O

Replaces E000635

LEGREST BZ7/BZ8 TYPE V-SERIES 2020 Sheet 4/4 - BOM				Plan No. / Plannr. E000810 / O
Scale / Schaal: 1:4	Drafted / Getekend	Verified / Nagezien	Confirmed / Bevestigd	
Date / Datum	13/07/2012	14/10/2020	14/10/2020	
Init. / Init.	JG	SD	PJ	

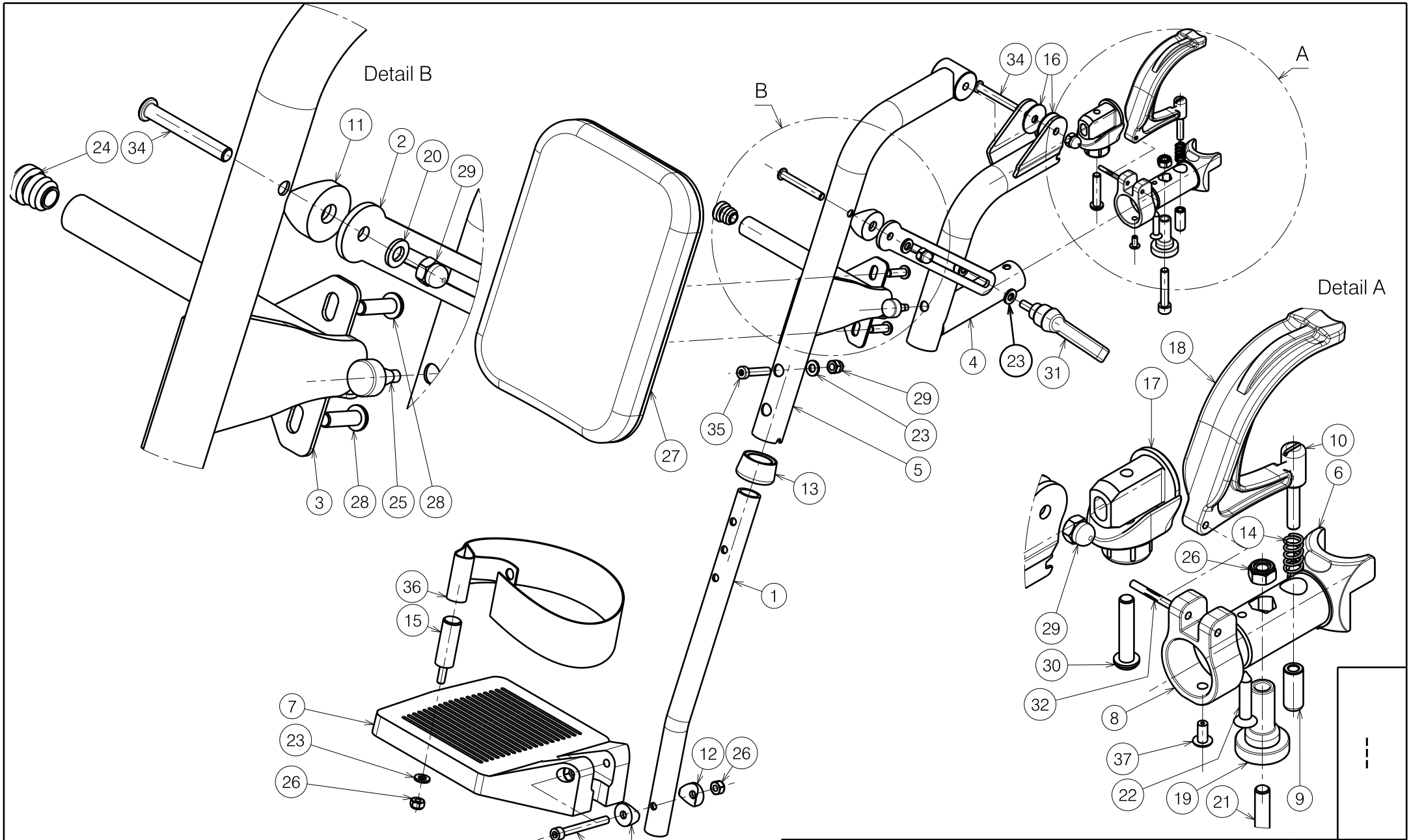

B08 TYPE D-SERIES	Sheet 1/2			Plan No.
				E000981 / D
Scale: 1:4	Drafted	Verified	Confirmed	
Date	27/02/2015	05/09/2019	05/09/2019	
Initials	TT	SD	PJ	

E000981 / D

Material			
No.	Plan	Article	Quantity
1	Y003841	F002392	1
2	Y006293	1594154	1
3	Y012670	1672404	1
4	Y021362	2010454 (L)	1
	Y021353	2010554 (R)	1
5	Y021360	2010654 (L)	1
	Y021355	2010754 (R)	1
6	XC00129	3990491	1
7	XC00156	3991001 (38)	1
	X002102	1004824 (39-44)	1
	X001740	1004822 (46-52)	1
8	XC00300	3991091	1
9	XC00304	3991093	1
10	XC00305	3991094	1
11	X000106	G003218	1
12	X000586	1005742	2
13	X002137	1992415	1
14	X002169	1992791	1
15	X002238	1992702	1
16	X003036	1997486	2
17	X004414	1904130	1
18	X004418	1904207	1
19	X004660	1905195	1

Material			
No.	Plan	Article	Quantity
20	M6 DIN125A	1000973	1
21	M6X35 DIN912	1001496	1
22	Φ4.8X25 DIN7983	1001536	1
23	M6 DIN125A	1001564	3
24	Φ16	1001598	1
25	---	1001637	1
26	M6 DIN985	1001680	3
27	Small	1002163	1
	Large	1002158	1
28	M6X20 ISO7380	1006999	2
29	M6 DIN986	1008492	3
30	M6X30 ISO7380	1009588	1
31	M6X15	1009933	1
32	Φ3X24 DIN1475	1905640	1
33	M6X55 DIN912	1908726	1
34	M6X45 ISO7380	1991017	2
35	M6X30 DIN7984	1992721	1
36	420x40	1992802	1
37	Φ4X8	1992805	1

Only left side depicted

B08 TYPE D-SERIES Sheet 2/2

Plan No. E000981 / D

Scale: 1:4	Drafted	Verified	Confirmed
Date	27/02/2015	05/09/2019	05/09/2019
Initials	TT	SD	PJ

VERMEIREN

E000981 / D

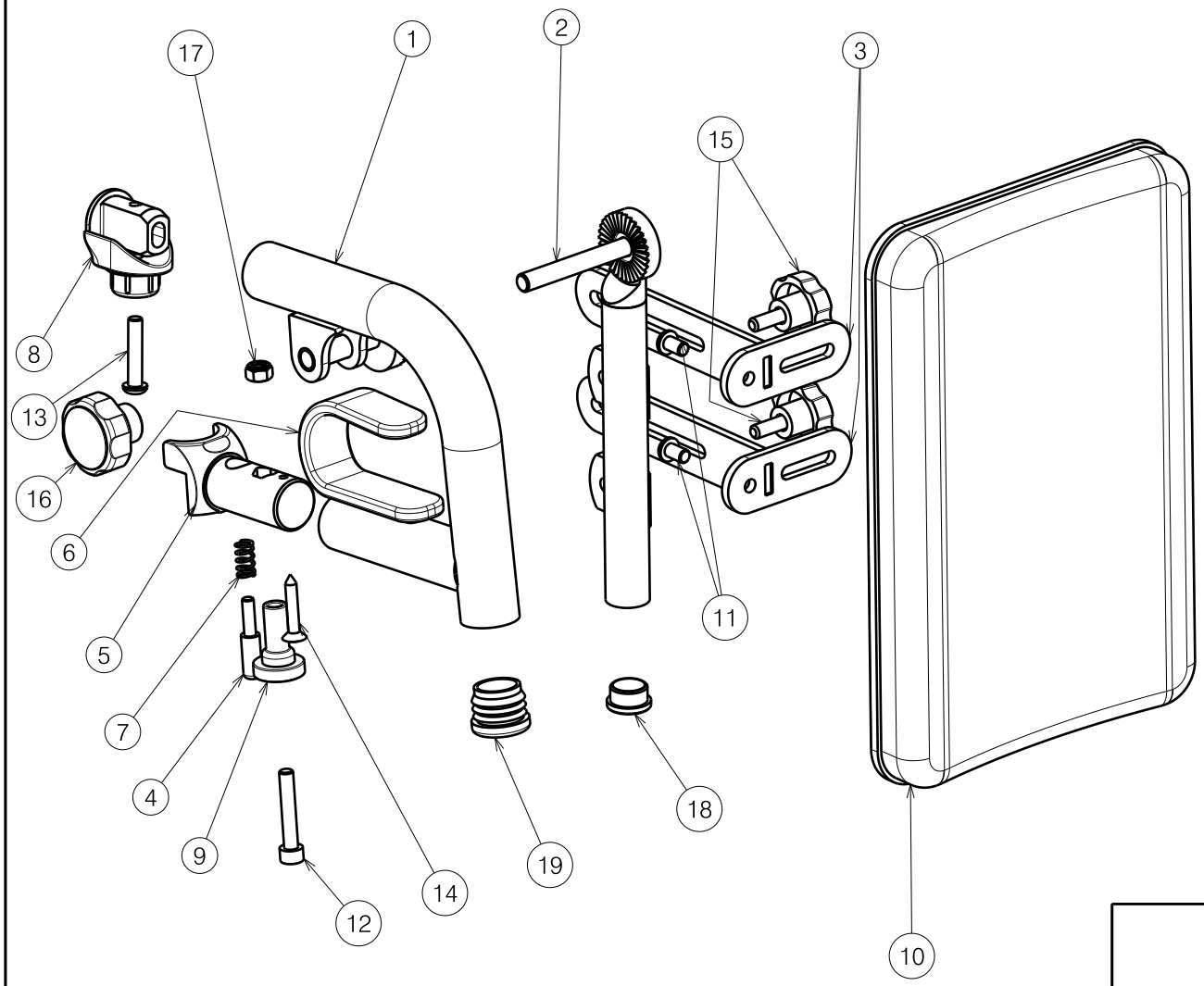

Material			
No.	Plan	Article	Quantity
1	YP08090	2607154 (L)	1
	YP08091	2607254 (R)	1
2	YP08093	2607354 (L)	1
	YP08094	2607454 (R)	1
3	YP08095	2607554	4
4	XC00128	3990490	2
5	XC00129	3990491	2
6	XC00130	3990492	2
7	X002169	1992791	2
8	X004414	1904130	2
9	X004660	1905195	2
10	Plate small	1002163	2
	Plate large	1002158	2
11	M6x10	1900641	4
12	M6x35	1001496	2
13	M6x30	1009588	2
14	Screw 4,8x25	1001536	2
15	Star Knob M6x15	1001577	4
16	Plastic Head Φ35	1998550	2
17	Nut M6	1001680	2
18	Tube cap Φ19	1001602	2
19	Tube cap Φ25,4	1001608	2

Right side only depicted, quantities are for 1 pair

BK7				Plan No.
				EP00499/ A
Scale: 1:3	Drafted	Verified	Confirmed	
Date	27/02/2020	27/02/2020	27/02/2020	
Initials	PM	DB	TK	

EP00499 / A

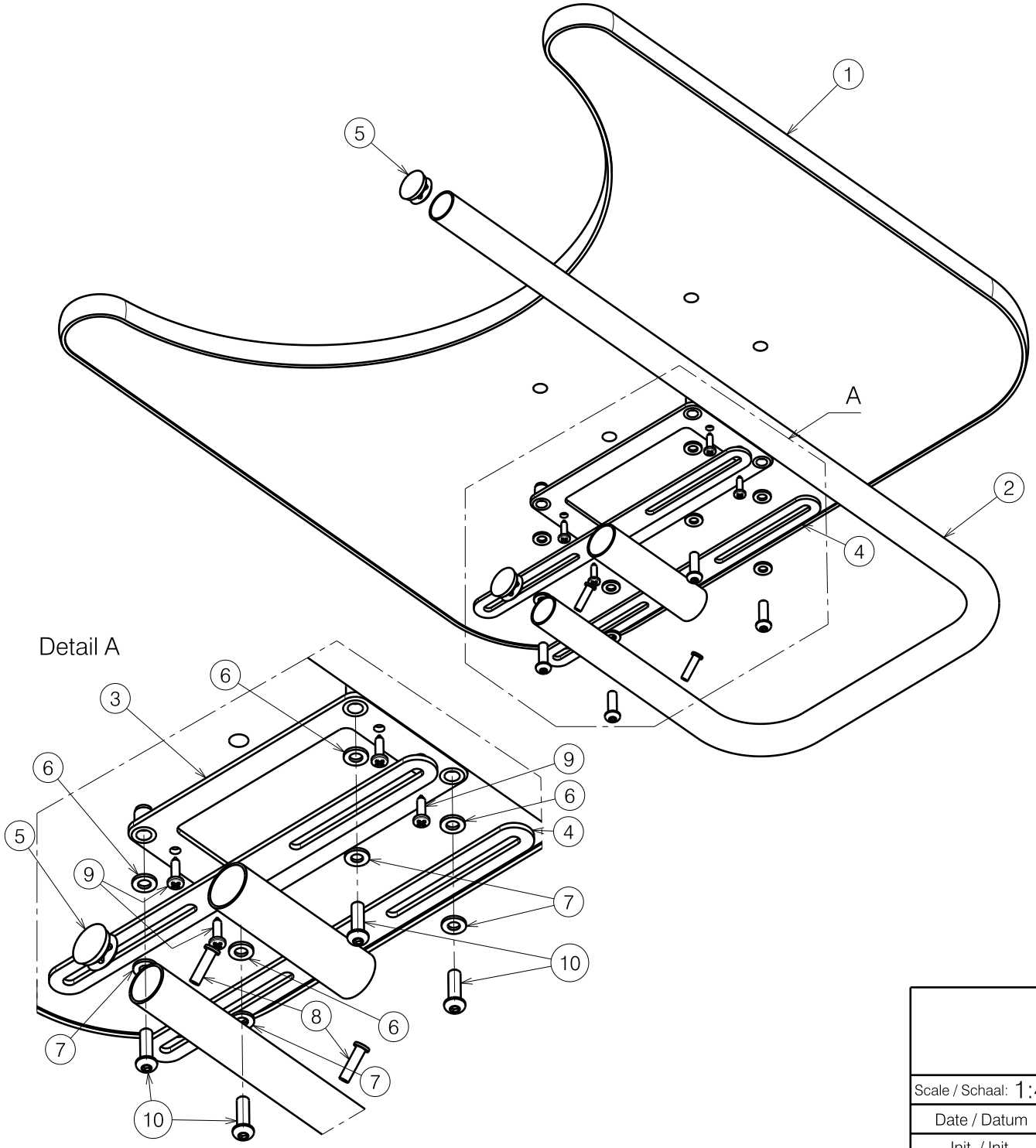

Material / Materiaal			
No. / Nr.	Plan	Article / Artikel	Number / Aantal
1	X004389	1903684 (Small)	1
	X003883	1901986 (Medium)	1
	X003884	1901987 (Large)	1
2	Y002759	1217101 (Large)	1
	Y003430	1217001 (Small)	1
3	Y011781	1678400	1
4	Y011782	1678501	1
5	X001101	1001605	2
6	---	1000973	4
7	---	1001564	4
8	---	1001589	2
9	---	1003021	4
10	---	1006999	4

Seat width / Zitbreedte	Combination / Combinatie
39	A
42	B
44	B
46	C
48	D
50	D
55	D

A: 1903684 + 1217101
B: 1901986 + 1217001
C: 1901986 + 1217101
D: 1901987 + 1217101

B12 ALL MODELS B12 ALLE MODELLEN				Plan No. / Plannr. E000538/C
Scale / Schaal: 1:4	Drafted / Getekend	Verified / Nagezien	Confirmed / Bevestigd	VERMEIREN
Date / Datum	18/12/2008	12/04/2011	12/04/2011	
Init. / Init.	SD	DD	PJ	

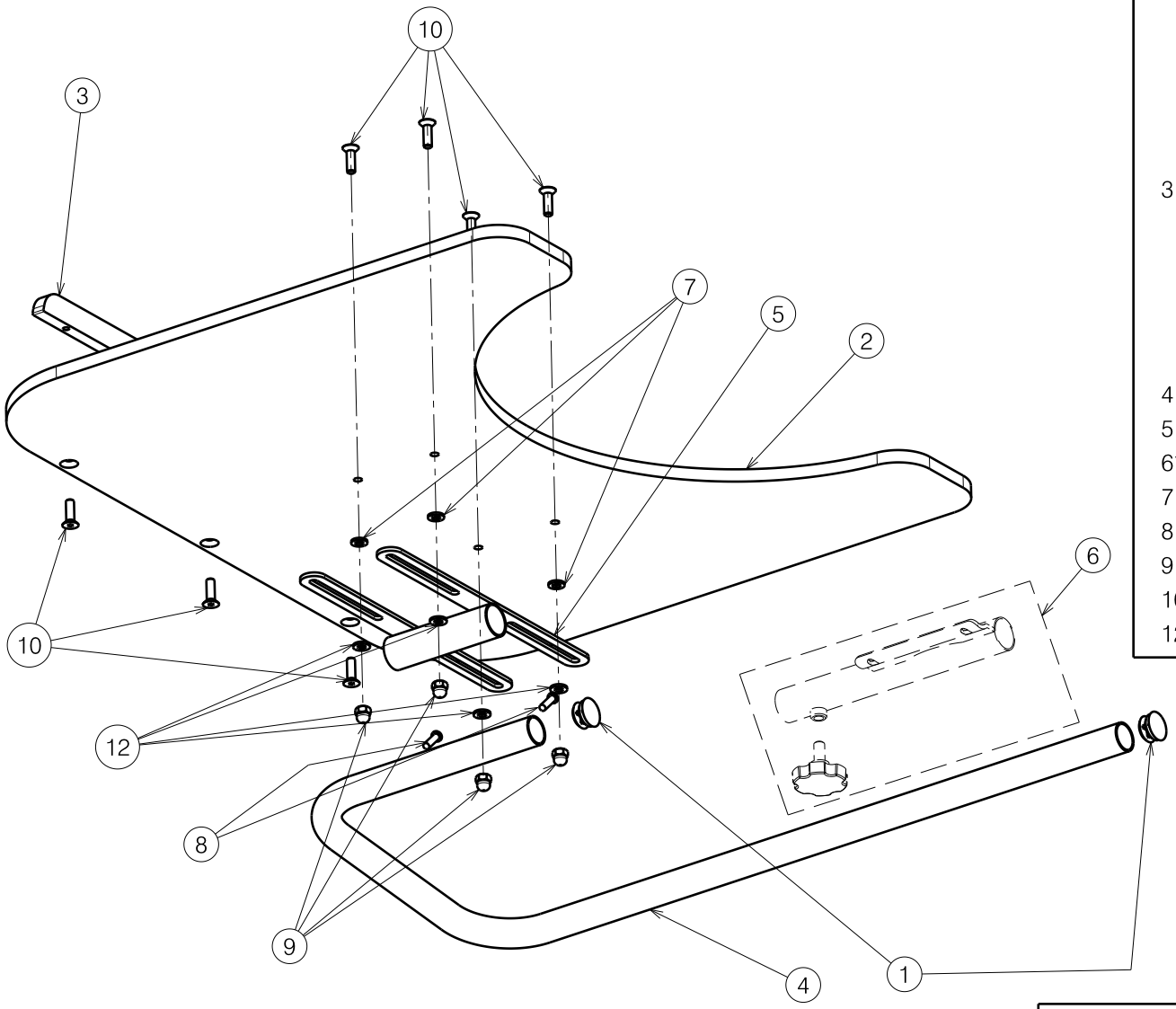

Material				
No.	Plan	Article	Quantity	Model/Seat width
1	X001101	1001605	2	
2	X004746	1905771	1	39 / 42
	X004753	1905796	1	44/46/48/50
				Inovys II 40/45
	X004754	1905797	1	53 / 56
				Inovys II 50
	X004790	1905942	1	60
3	X004791	1905943	1	39 / 42
	X004792	1905944	1	44/46/48/50
				Inovys II 40/45
	X004793	1905945	1	53 / 56
				Inovys II 50
	X004794	1905946	1	60
4	Y002759	1217101	1	
5	Y011782	1678501	1	
6*	---	P000025	1	
7	M6 DIN125A	1000973	4	
8	---	1001589	4	
9	M6x12	1008492	4	
10	M6X20 DIN7991	1903081	7	
12	M6 DIN125A	1001564	4	

* For attachment B13 refer to P000025

E000633 / L

B15 PLEXI TABLE MANUAL WHEELCHAIRS				Plan No. / Plannr.
				E000633 / L
Scale / Schaal: 1:5	Drafted / Getekend	Verified / Nagezien	Confirmed / Bevestigd	VERMEIREN
Date / Datum	26/07/2010	31/03/2020	31/03/2020	
Init. / Init.	DD	SD	PJ	

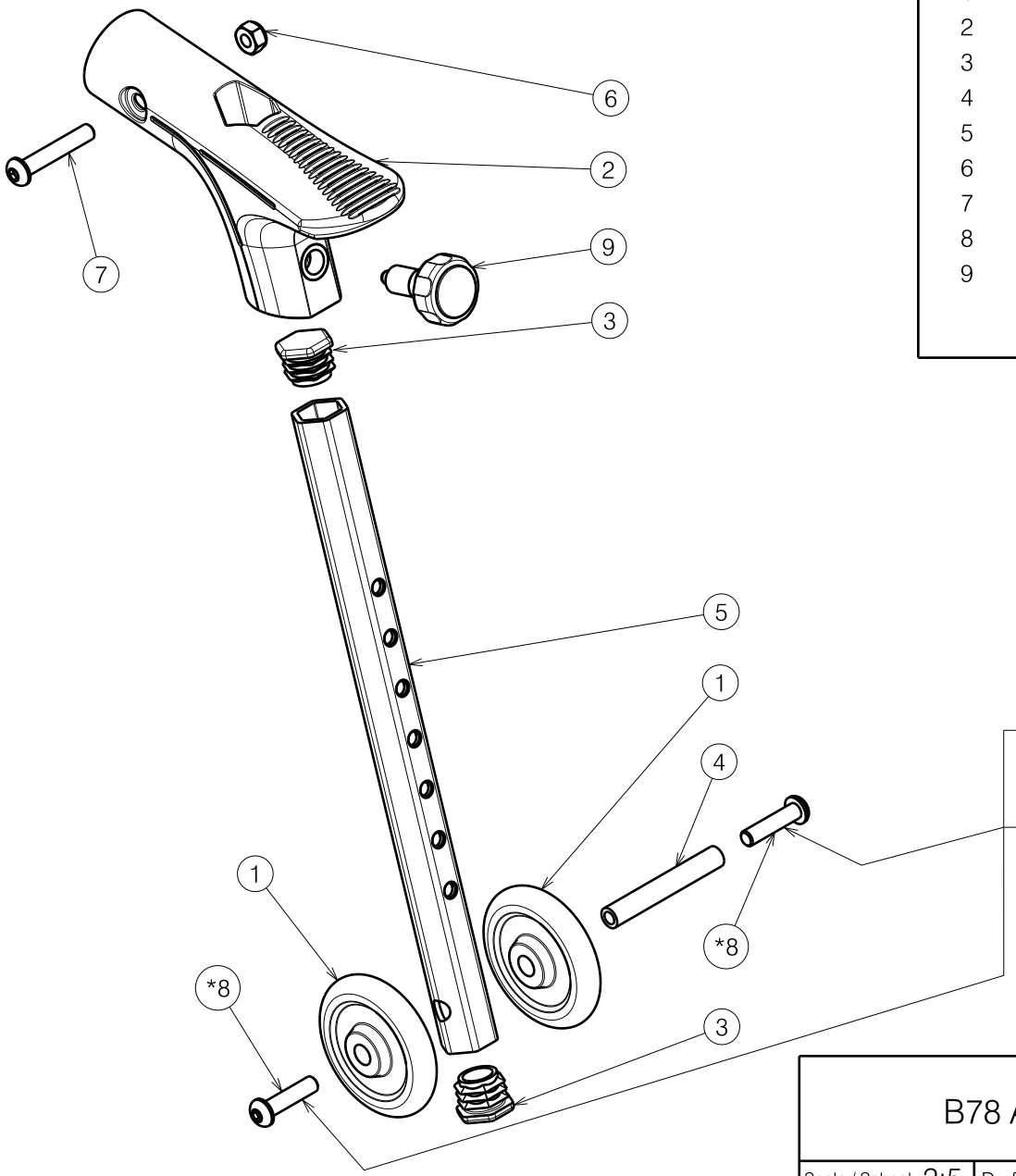

Material / Materiaal			
No. / Nr.	Plan	Article / Artikel	Quantity / Aantal
1	X004747	1906057	2
2	X004750	1906037	1
3	X004774	1906056	2
4	X004800	1740300	1
5	Y016850	1740132	1
6	---	1001680	1
7	---	1006057	1
8	---	1006998	2
9	---	1999935	1

*8	Glue with weicon AN302-43 (H900009) Lijmen met weicon AN302-43 (H900009)

B78 ANTI-TIPPING V-SERIES				Plan No. / Plannr. E000634 / B
Scale / Schaal: 2:5	Drafted / Getekend	Verified / Nagezien	Confirmed / Bevestigd	VERMEIREN
Date / Datum	01/09/2010	22/04/2014	22/04/2014	
Init. / Init.	DD	TT	PJ	

E000634 / B

Material			
No.	Plan	Article	Quantity
1	---	1906616	1
2	X001473	1002994	1
3	---	1001534	1

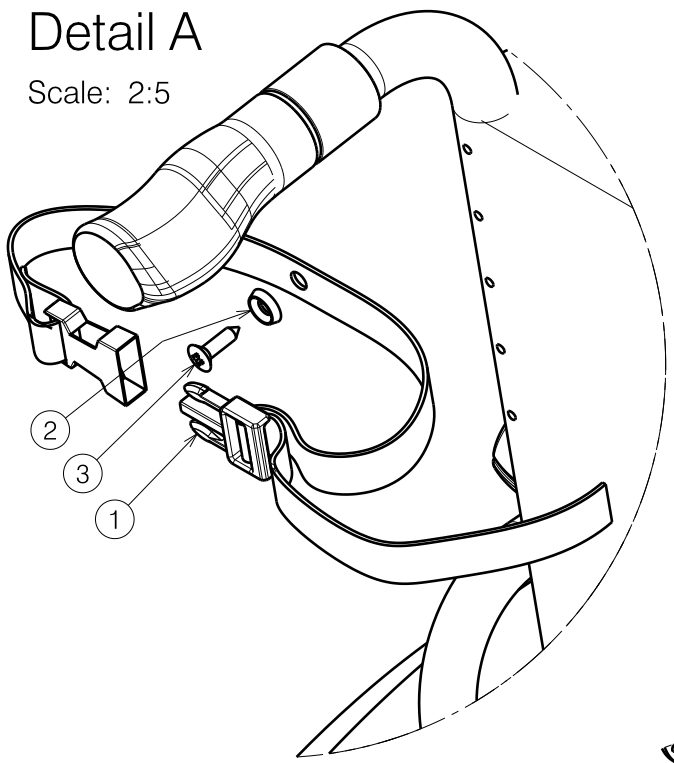

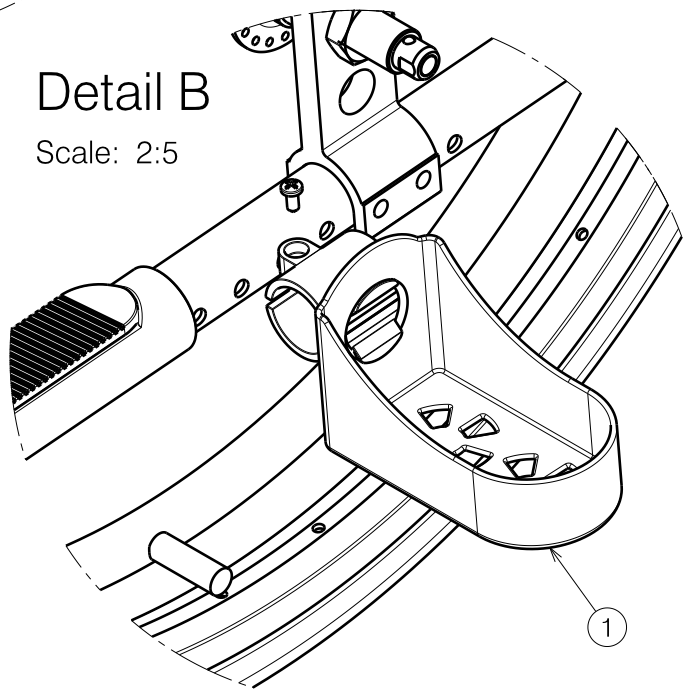

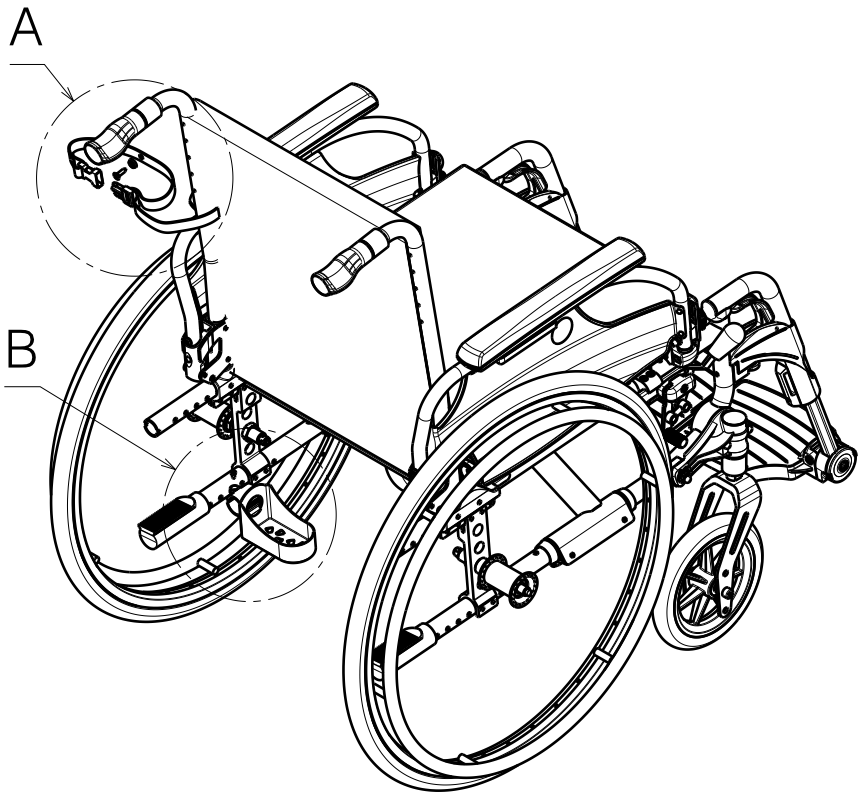

B31 CRUTCH HOLDER V200-V300 B31 KRUKKENHOUDER V200-V300				Plan No. E000685 / B
Scale: 1:10	Drafted	Verified	Confirmed	
Date	04/02/2011	04/02/2011	04/02/2011	
Initials	DD	SD	PJ	

E000685 / B

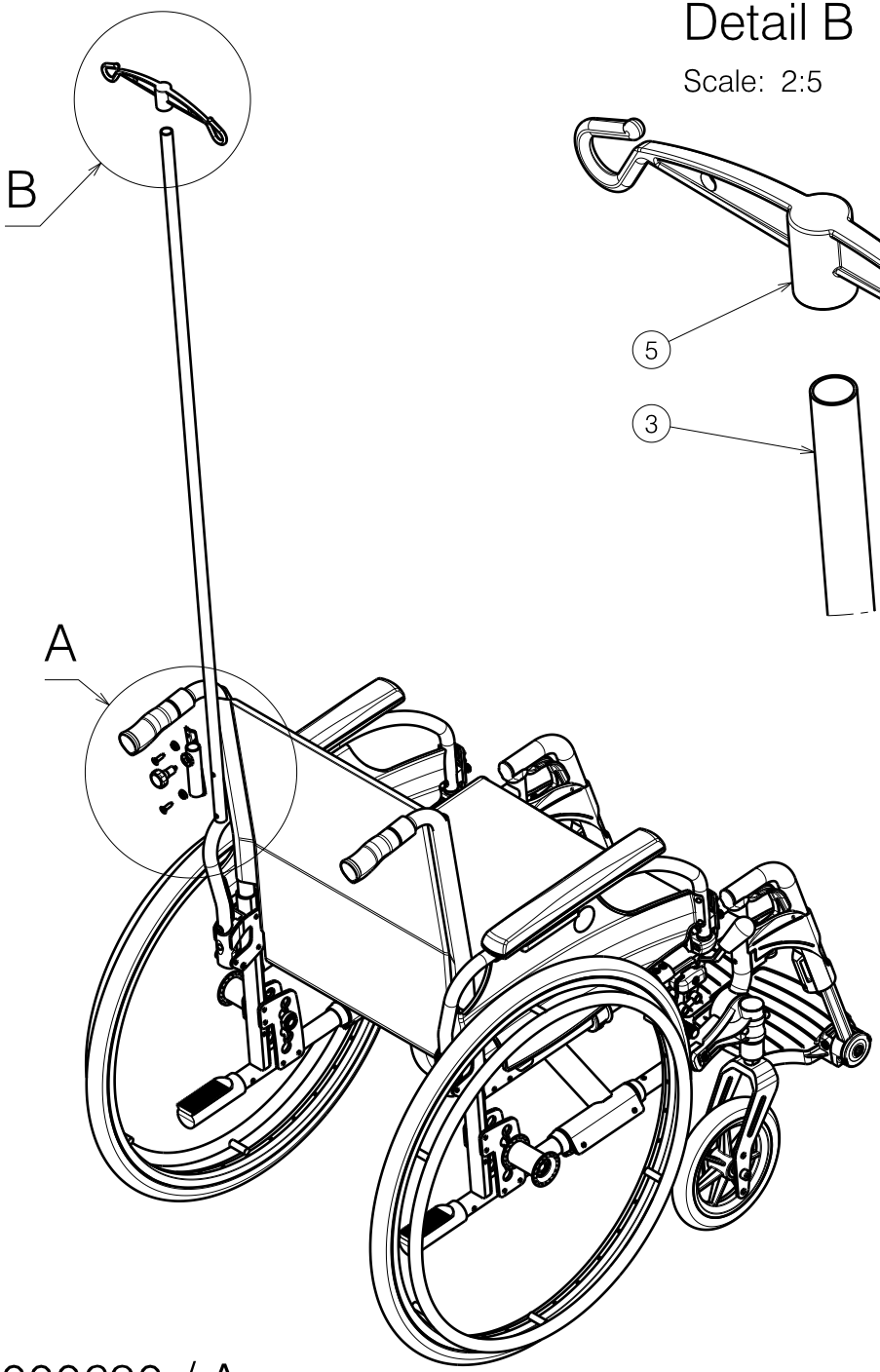

Detail B

Scale: 2:5

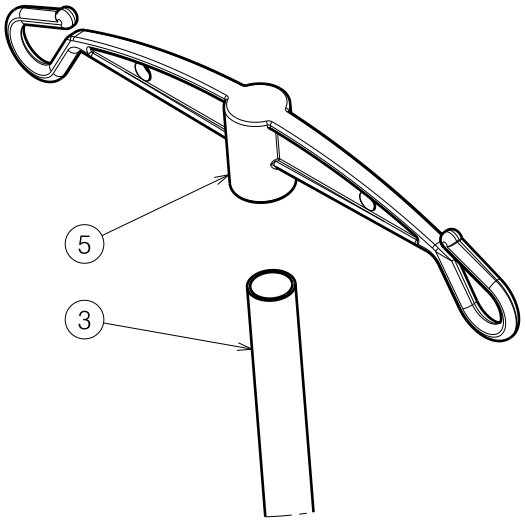

Material			
No.	Plan	Article	Quantity
1	X001473	1002994	2
2	Y017610	1754454	1
3	Y017612	1754501	1
4	---	1001534	2
5	---	1906917	1
6	---	1999935	1

Detail A

Scale: 2:5

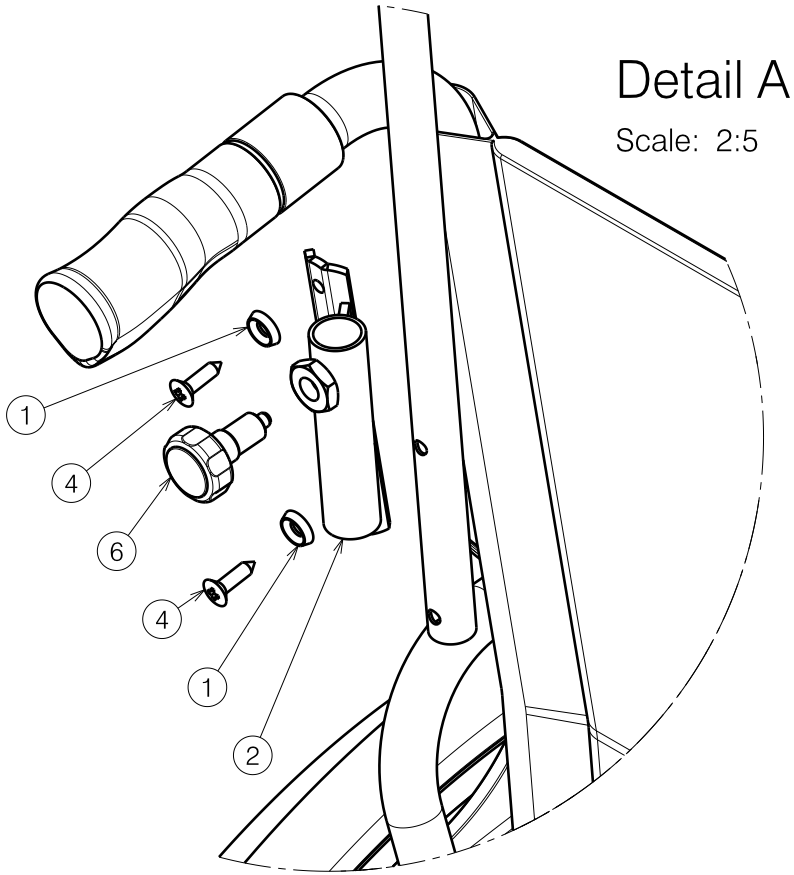

B52 SERUM HOLDER V-SERIE B52 SERUMHOUDER V-REEKS				Plan No. E000690 / A
Scale: 1:10	Drafted	Verified	Confirmed	VERMEIREN
Date	06/04/2011	06/04/2011	06/04/2011	
Initials	DD	SD	PJ	

E000690 / A

Material			
No.	Plan	Article	Quantity
1	---	3990041	2
2	X002356	1502800	2
3	---	1906419 (L)	1
	---	1906420 (R)	1
3A	X002437	1992699	2
3B	---	1906205	2
3C	---	1993218	(2X) 0.75m
3D	---	1004094	2
3E	---	1004109	2
3F	---	1994450	2
4	XC00017	1C11600	2
5	X003986	1902199	2
6	X004898	17551 (L)	1
	X004897	17552 (R)	1
7	---	1001486	2
8	Y006560	1575054	2
9	---	1006999	2
10	---	3990599	2
3G	---	1993237	2
12	---	1008492	4
13	---	1003909	2
14*			
15**	---	1001580	4
16	Y006559	1995662	2
17	Y001772	17609	2
18	---	1001589	2

3A - 3G part of 3

*: not depicted

**: two spare pieces

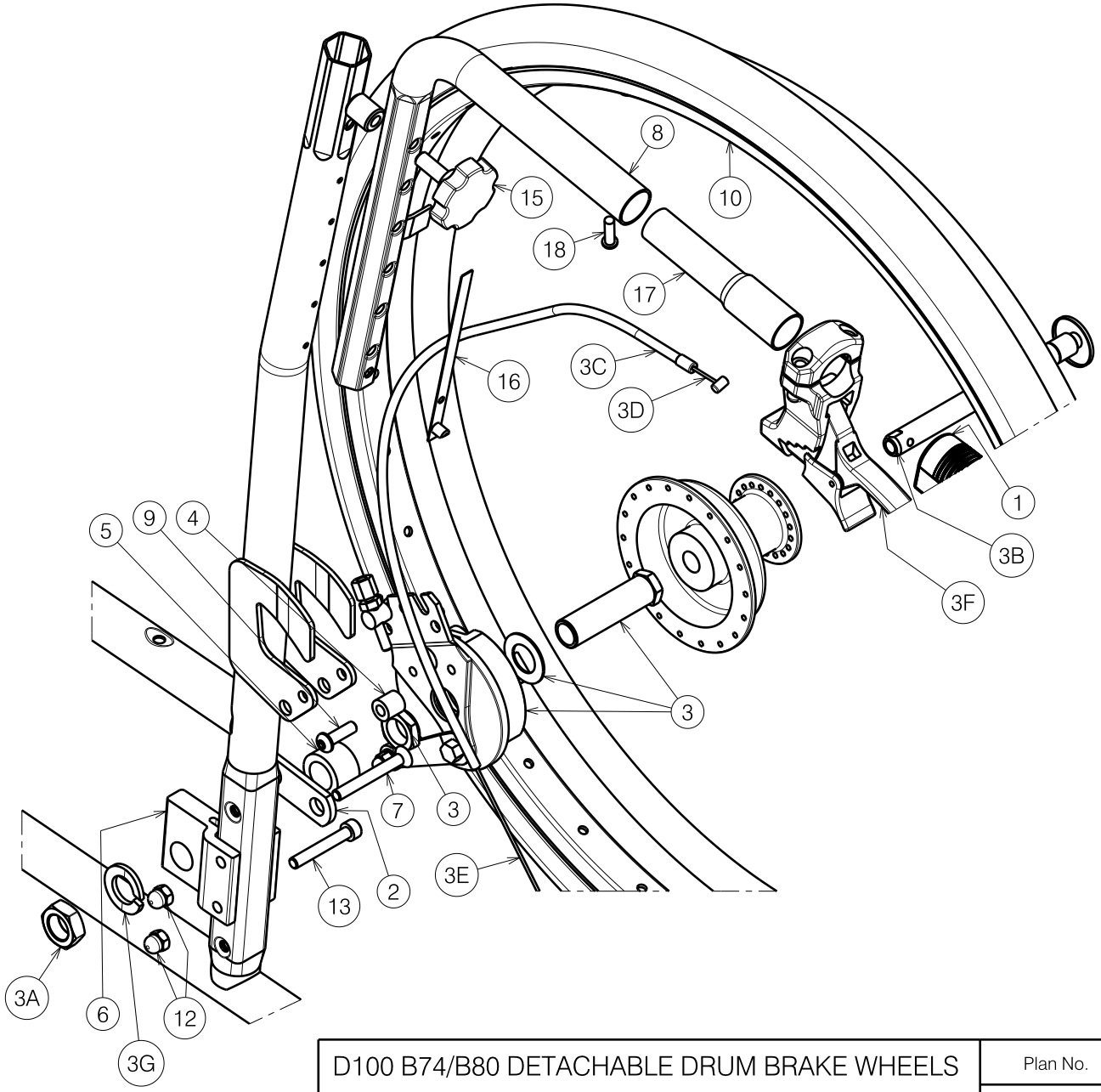

D100 B74/B80 DETACHABLE DRUM BRAKE WHEELS D100 B74/B80 AFNEEMBARE TROMMELREMWIELEN				Plan No. E000733 / H
Scale: 1:4	Drafted	Verified	Confirmed	VERMEIREN
Date	30/05/2011	26/03/2014	26/03/2014	
Initials	SD	TT	PJ	

E000733 / H

Material			
No.	Plan	Article	Quantity
1	---	3990041	2
2	X002356	1502800	2
3	---	1906419 (L)	1
	---	1906420 (R)	1
3A	X002437	1992699	2
3B	---	1906205	2
3C	---	1993218	(2X) 0.75m
3D	---	1004094	2
3E	---	1004109	2
3F	---	1994450	2
4	XC00017	1C11600	2
5	X003986	1902199	2
6	X004898	17551 (L)	1
	X004897	17552 (R)	1
7	---	1001486	2
8	Y006560	1575054	2
9	---	1006999	2
10	---	3990599	2
3G	M16 type S DIN17222	1911653	2
12	---	1008492	4
13	---	1003909	2
14*			
15**	---	1001580	4
16	Y006559	1995662	2
17	Y001772	17609	2
18	---	1001589	2

3A - 3G part of 3

*: not depicted

**: two spare pieces

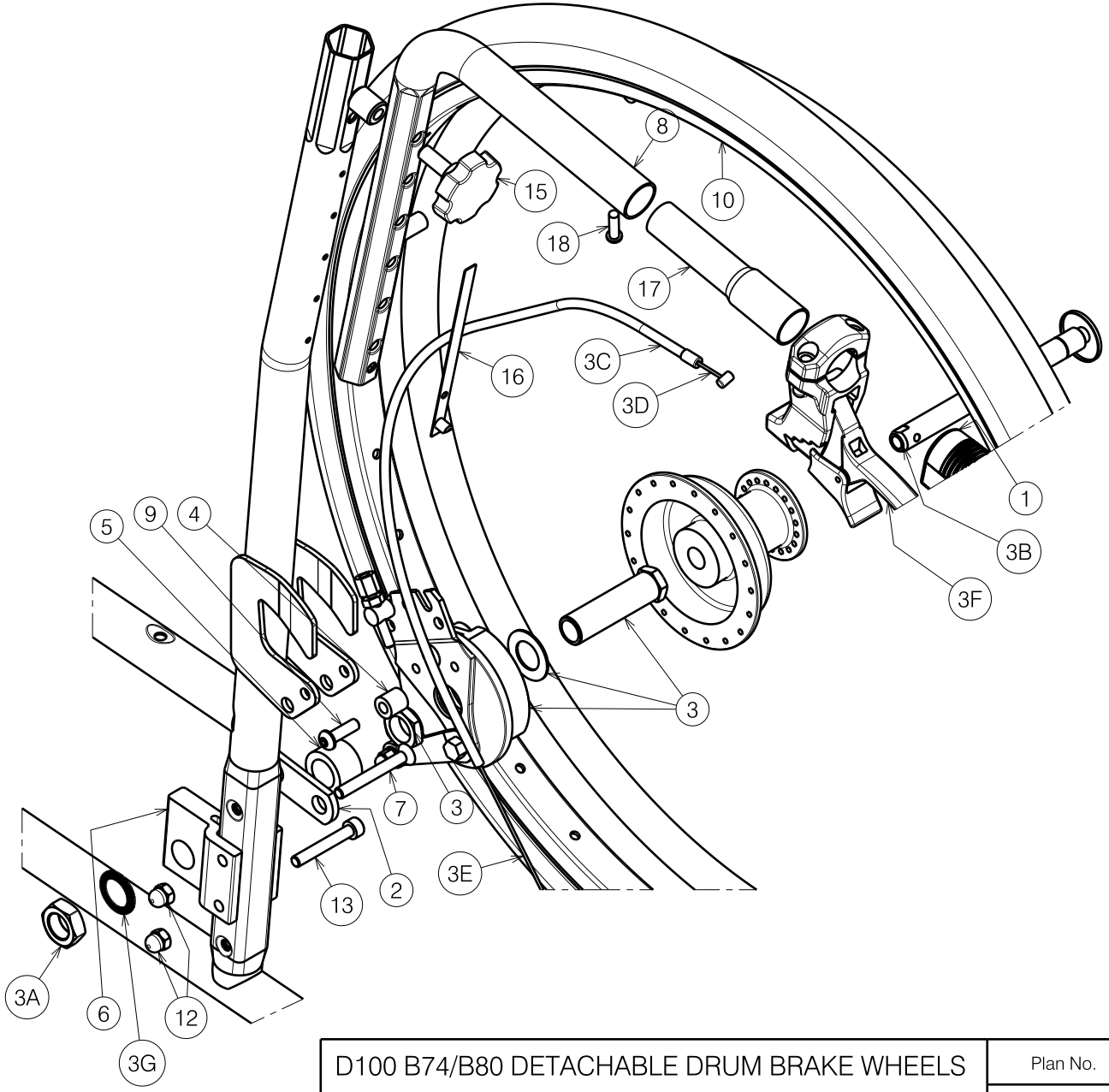

D100 B74/B80 DETACHABLE DRUM BRAKE WHEELS D100 B74/B80 AFNEEMBARE TROMMELREMWIELEN				Plan No. E000733 / I
Scale: 1:4	Drafted	Verified	Confirmed	
Date	24/08/2015	24/08/2015	24/08/2015	
Initials	SD	TT	PJ	

E000733 / I

Material			
No.	Plan	Article	Quantity
1	X002532	1528800 (1)	2
	X004926	1758600 (2)	2
	X002528	1528400 (3)	2
	X004922	1758400 (4)	2
	X002530	1528600 (5)	2
2	X002533	1528900 (1)	2
	X004927	1758700 (2)	2
	X002529	1528500 (3)	2
	X004923	1758500 (4)	2
	X002531	1528700 (5)	2
3	X002527	1528300	2
4	---	1001580	2
6	---	F006491 (*)	2
	---	F002907 (**)	2
7	Y020155	1791654 (38)	1
	Y004761	1521754 (39)	1
	Y020156	1791754 (40)	1
	Y004762	1521854 (42)	1
	Y004763	1521954 (44)	1
	Y004764	1522054 (46)	1
	Y004765	1522154 (48)	1
	Y004766	1522254 (50)	1
	Y020157	1791854 (52)	1

(1) V100 / Jazz S50
(2) V100D / D100 / D200
(3) V200 / V300 / V500 / Eclips+ / Eclips X4
(4) V200D / V300D / D400
(5) 708D / Express

(*) V100 / V200D / V300D / D400 / Jazz S50
(**) V100D / V200 / V300 / V500 / D100 / D200 / Eclips+ / Eclips X4 / 708D / Express

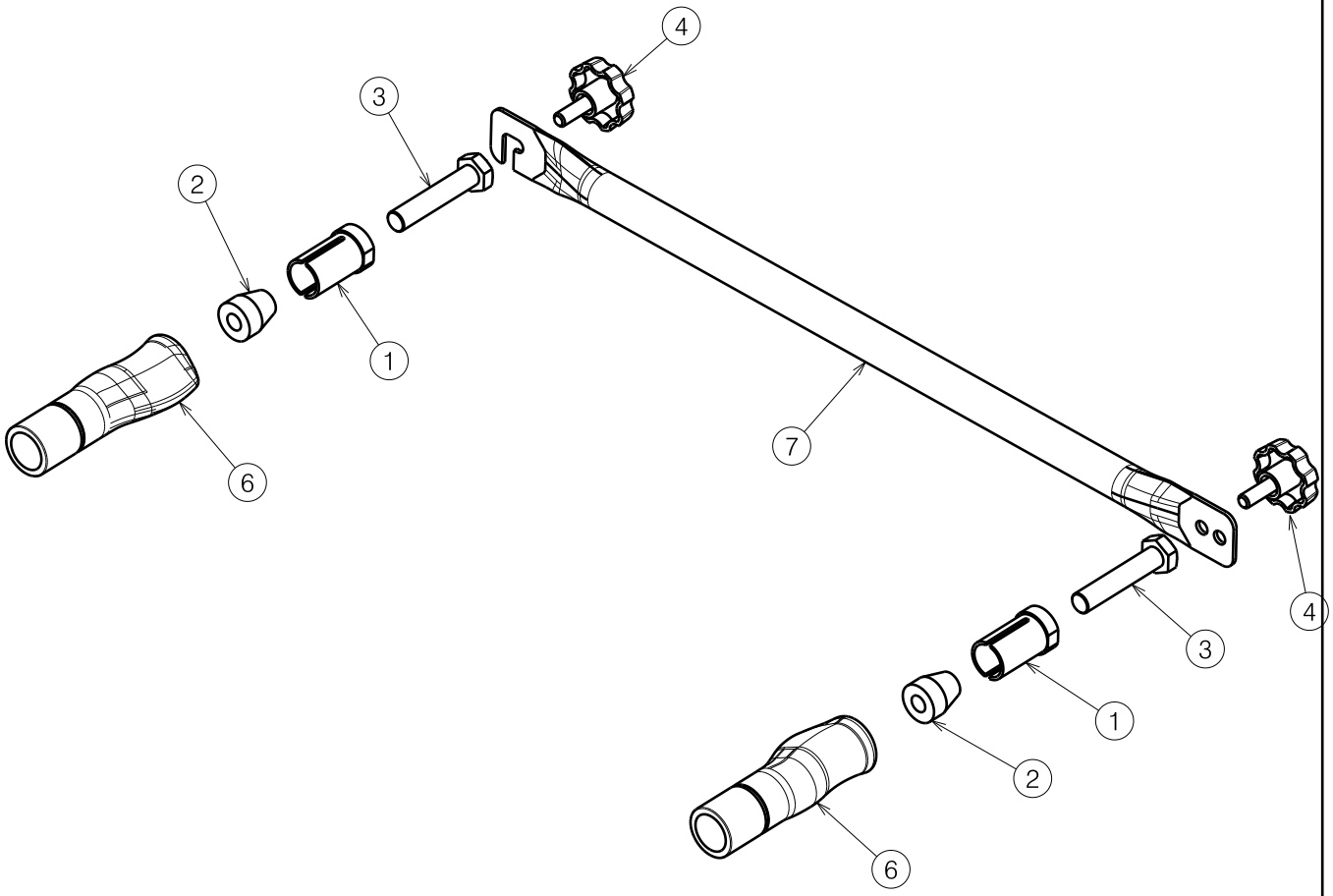

E000734 / E

B90 UNIVERSAL PUSH BAR B90 UNIVERSELE DUWBEUGEL				Plan No. E000734 / E
Scale: 1:4	Drafted	Verified	Confirmed	VERMEIREN
Date	10/06/2011	07/11/2019	07/11/2019	
Initials	SD	TT	PJ	

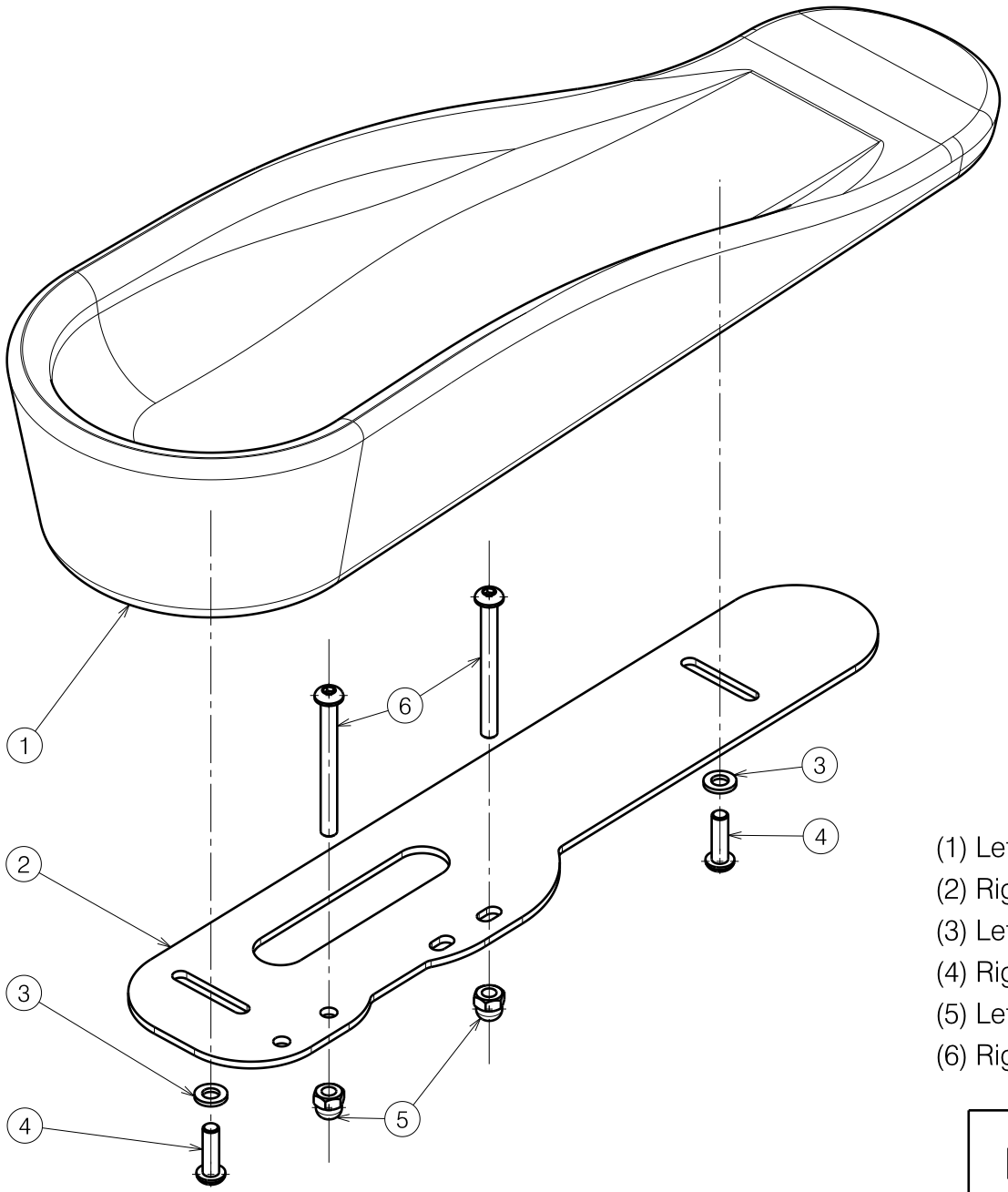

Material			
No.	Plan	Article	Quantity
1	X003872	1901134	1
2	Y017946	1759204	1
3	M6 DIN125A	1000973	2
4	M6x20	1006999	2
5	M6x12	1008492 *	2
	M6 DIN985	1001680 **	2
	M5 DIN985	1001679 ***	2
6	M6x60	1992915 *	2
	M6x10	1900641 **	2
	M5x16	1006112 ***	2

* for B02/B03 armrest

** for B04/B05 armrest

*** for BI5 V500/B04 V300DL

(1) Left B02/B03
(2) Right B02/B03
(3) Left B04/B05
(4) Right B04/B05
(5) Left BI5 V500/B04 V300DL
(6) Right BI5 V500/B04 V300DL

*1907408 (1)
*1907409 (2)
**1907410 (3)
**1907411 (4)
*** 1914427 (5)
*** 1914428 (6)

B66 TYPE V-SERIES ADJUSTABLE

Plan No. E000739 / E

Scale: 2:5	Drafted	Verified	Confirmed
Date	19/07/2011	26/10/2017	26/10/2017
Initials	TT	TT	PJ

VERMEIREN

E000739 / E

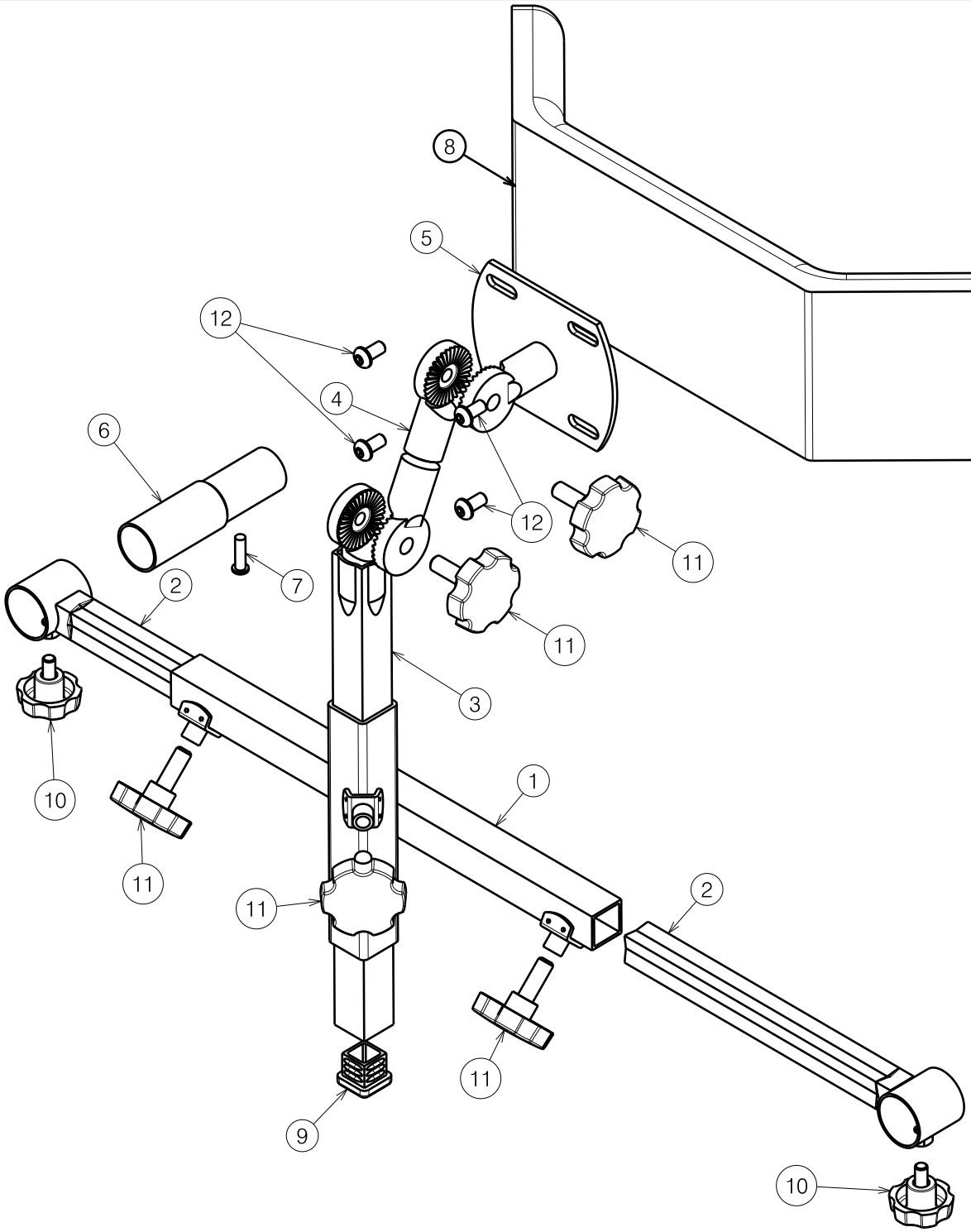

Material / Materiaal			
No. / Nr.	Plan	Article / Artikel	Number / Aantal
1	Y004914	1486504 (b)	1
	Y011668	1655804 (a)	1
2	Y004913	1486604 (a-2,3,4)	2
	Y006234	1487904 (a-1)	2
	Y018529	1770804 (b-1)	2
	Y018533	1770904 (b-2,3,4)	2
3	Y003411	1463104	1
4	Y003413	1463204	1
5	Y003414	1463304	1
6	Y017202	17421 (1)	2
	Y001772	17609 (2)	2
	Y018487	17711 (3)	2
	Y018538	17710 (4)	2
7	---	1001589	2
8	---	1907019	1
9	---	1001612	1
10	---	1003658	2
11	---	1001580	5
12	---	1007000	4

(1) V100 / V200D / V300D / D400
(2) V100D / D100 / D200
(3) V100D / D100 / D200 with B74
(4) V200 / V300
(a) Seat width 38 - 39 - 40 - 42 - 44
(b) Seat width 46 - 48 - 50 - 52 - 53 - 56 - 60

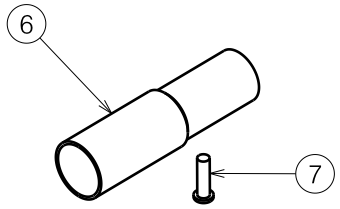

B47 V-SERIES / D-SERIES

Plan No. / Plannr.: E000808/G

Scale / Schaal: 1:3	Drafted / Getekend	Verified / Nagezien	Confirmed / Bevestigd
Date / Datum	21/02/2012	04/12/2020	04/12/2020
Init. / Init.	JG	SD	PJ

VERMEIREN

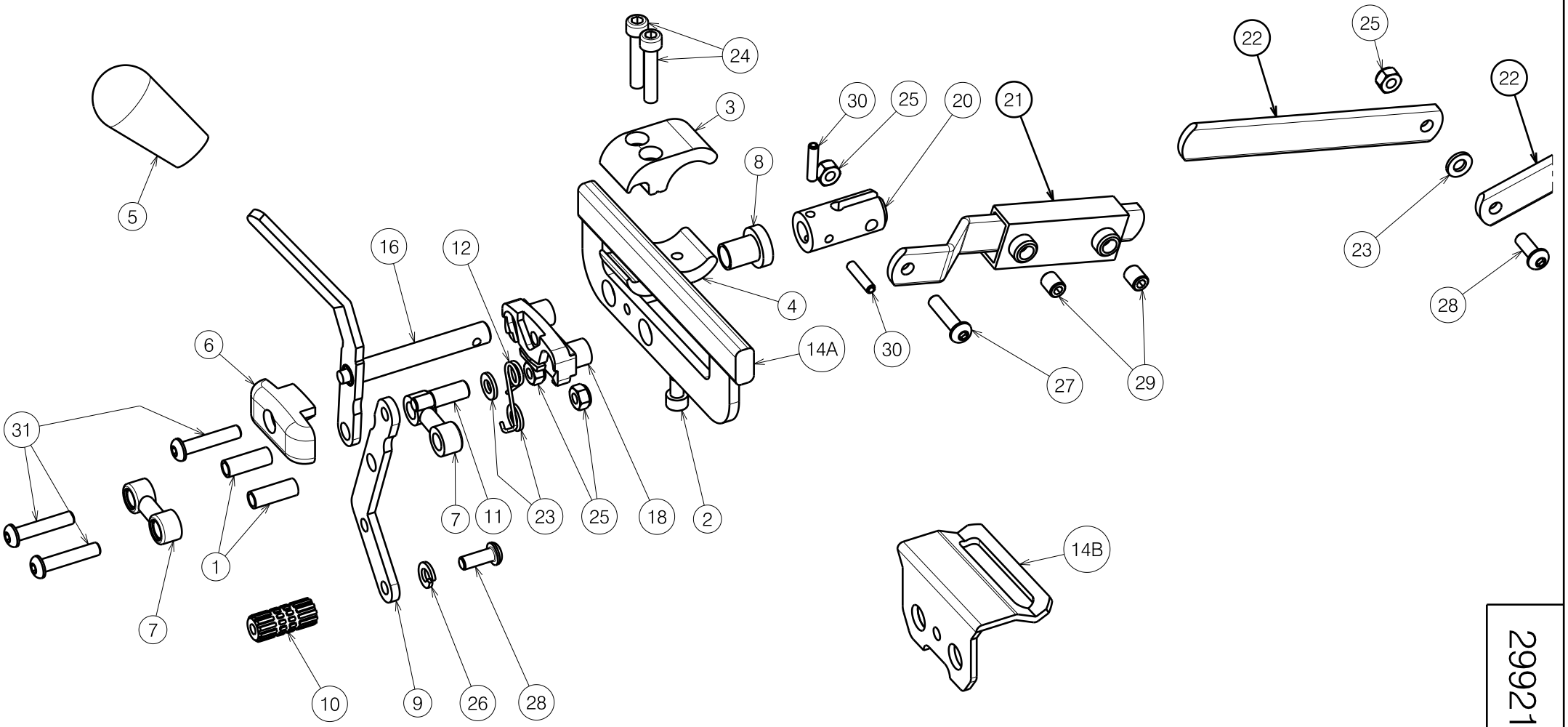

2992187

Sheet 1/3 - Left side

BRAKE HEM2 2014 - ECLIPS / 708 / JAZZ REM HEM2 2014 - ECLIPS / 708 / JAZZ				Plan No. E000922 / C
Scale: 2:5	Drafted	Verified	Confirmed	VERMEIREN
Date	28/01/2014	21/01/2019	21/01/2019	
Initials	SD	TT	PJ	

E000922 / C

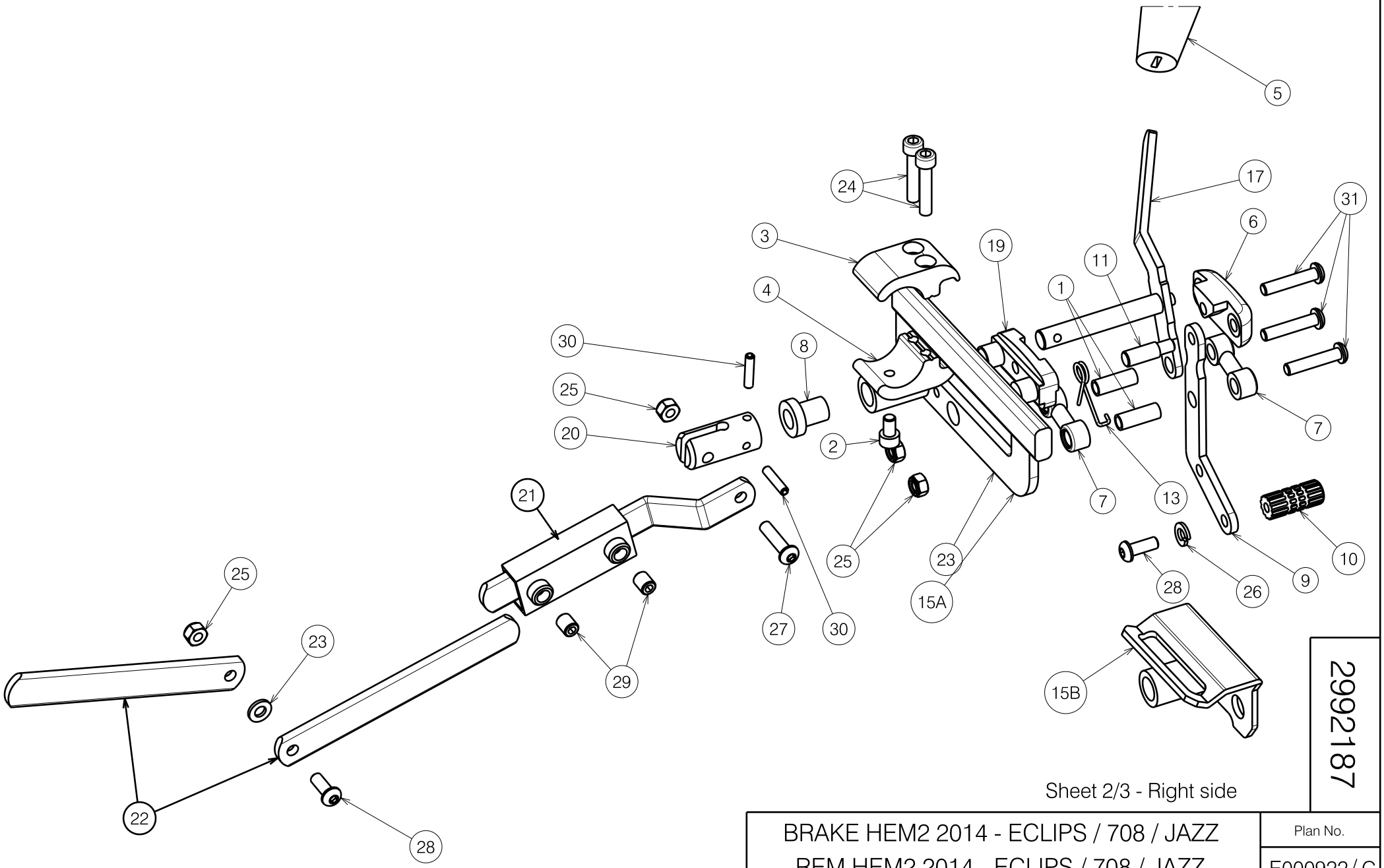

2992187

Sheet 2/3 - Right side

BRAKE HEM2 2014 - ECLIPS / 708 / JAZZ REM HEM2 2014 - ECLIPS / 708 / JAZZ				Plan No. E000922 / C
Scale: 2:5	Drafted	Verified	Confirmed	VERMEIREN
Date	28/01/2014	21/01/2019	21/01/2019	
Initials	SD	TT	PJ	

E000922 / C

Material			
No.	Plan	Article	Quantity
1	X000359	G001106	4
2*	X002112	1001491	2
3*	X002115	1552682	2
4*	X002116	1552782	2
5	X002134	1992411	2
6	X002140	1992427	2
7	X002141	1992435	4
8	X002469	1993579	2
9	X002471	1519554	2
10	X005274	17937	2
11	X005276	1793900	2
12	X005305	1910032	1
13	X005306	1910033	1
14A	Y004707	1519054	1
14B	Y004729	1520054	1
15A	Y004708	1519154	1
15B	Y004730	1520154	1
16	Y004711	1519354	1
17	Y004712	1519454	1
18	Y004723	F002793	1
19	Y004724	F002794	1
20	Y004877	1519200	2
21	Y005379	1543354	2
22	Y005381	1543454 (39-42)	2
	Y005383	1543554 (44-46)	2
	Y005385	1543654 (48-50)	2
23	M6 DIN125	1000973	5
24*	M6x30 DIN912	1001495	4
25	M6 DIN985	1001680	7
26	M6 DIN127	1004414	2
27	M6x25 ISO7380	1006998	2
28	M6x16 ISO7380	1008459	3
29	M8x10 DIN916/45H	1008942	4
30	D4x20 DIN1481	1009584	4
31	M6x30 ISO7380	1009588	6

* Only for Eclips / Jazz / V-serie

A: Eclips / Jazz / V-serie

B: 708

Sheet 3/3

29921187

BRAKE HEM2 2014 - ECLIPS / 708 / JAZZ

REM HEM2 2014 - ECLIPS / 708 / JAZZ

Plan No. E000922 / C

Scale: 2:5	Drafted	Verified	Confirmed
Date	28/01/2014	21/01/2019	21/01/2019
Initials	SD	TT	PJ

VERMEIREN

E000922 / C

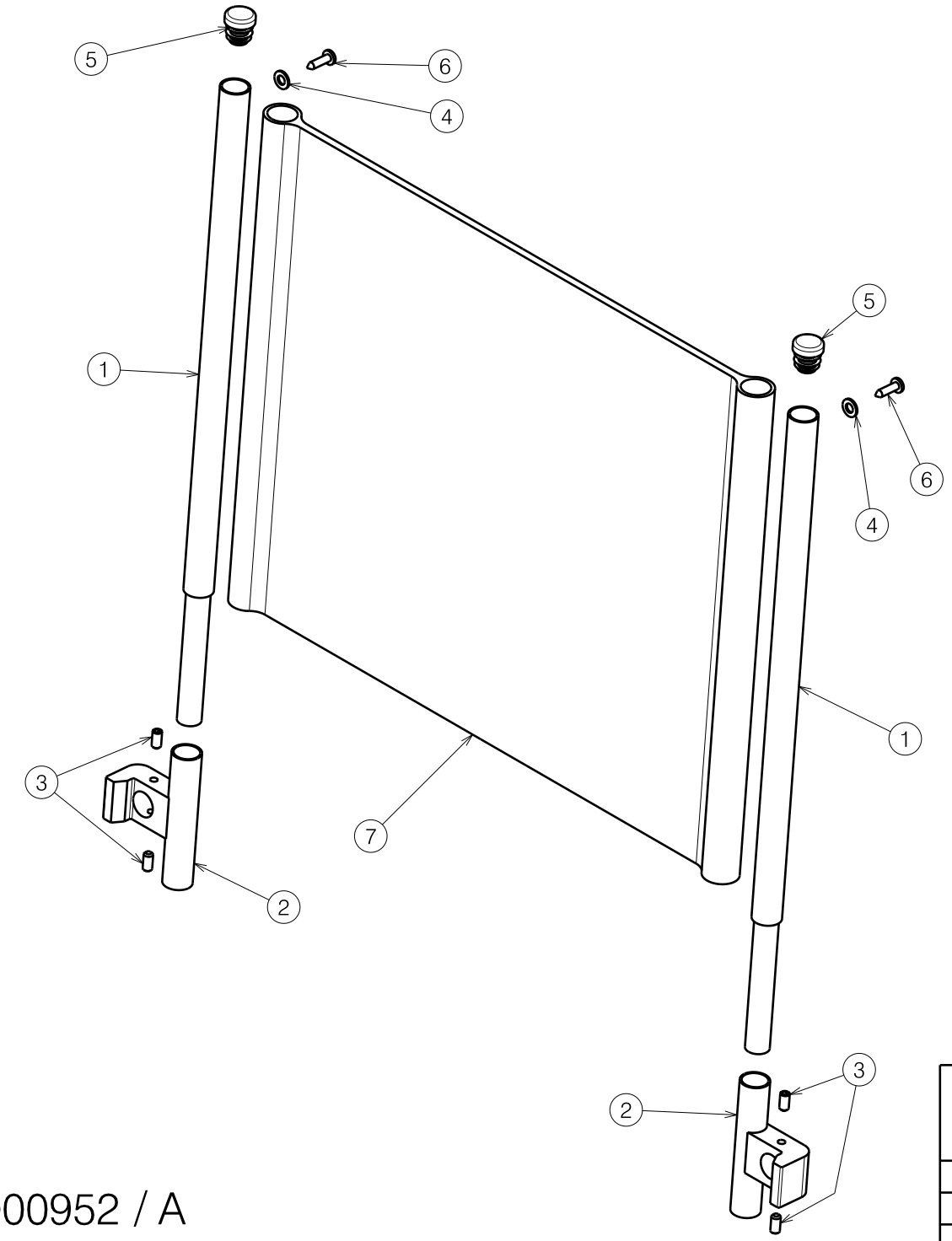

Material			
No.	Plan	Article	Quantity
1	Y000917	1322904	2
2	Y020682	2003604	2
3	M5x10 DIN916/45H	1001485	4
4	M5 DIN125A	1001550	2
5	D16	1001598	2
6	D4X16	1003021	2
7	---	3991161 (38)	1
	---	3991589 (40)	1
	---	3991163 (42)	1
	---	3991164 (44)	1
	---	3991165 (46)	1
	---	3991166 (48)	1
	---	3991167 (50)	1
	---	3991168 (52)	1

E000952 / A

B14 TYPE D-SERIES				Plan No.
				E000952 / A
Scale: 3:10	Drafted	Verified	Confirmed	VERMEIREN
Date	14/04/2014	14/04/2014	14/04/2014	
Initials	SD	SD	PJ	

Material			
No.	Plan	Article	Quantity
1	Y020924	2005254 (39)	1
	Y020925	2005354 (42)	1
	Y020926	2005454 (44)	1
	Y020927	2005554 (46)	1
	Y020928	2005654 (48)	1
	Y020929	2005754 (50)	1
	Y020930	2005854 (53)	1
	Y020931	2005954 (56)	1
	Y020932	2006054 (60)	1
	Y020933	2006154 (38)	1
	Y020934	2006254 (40)	1
	Y020940	2006854 (52)	1

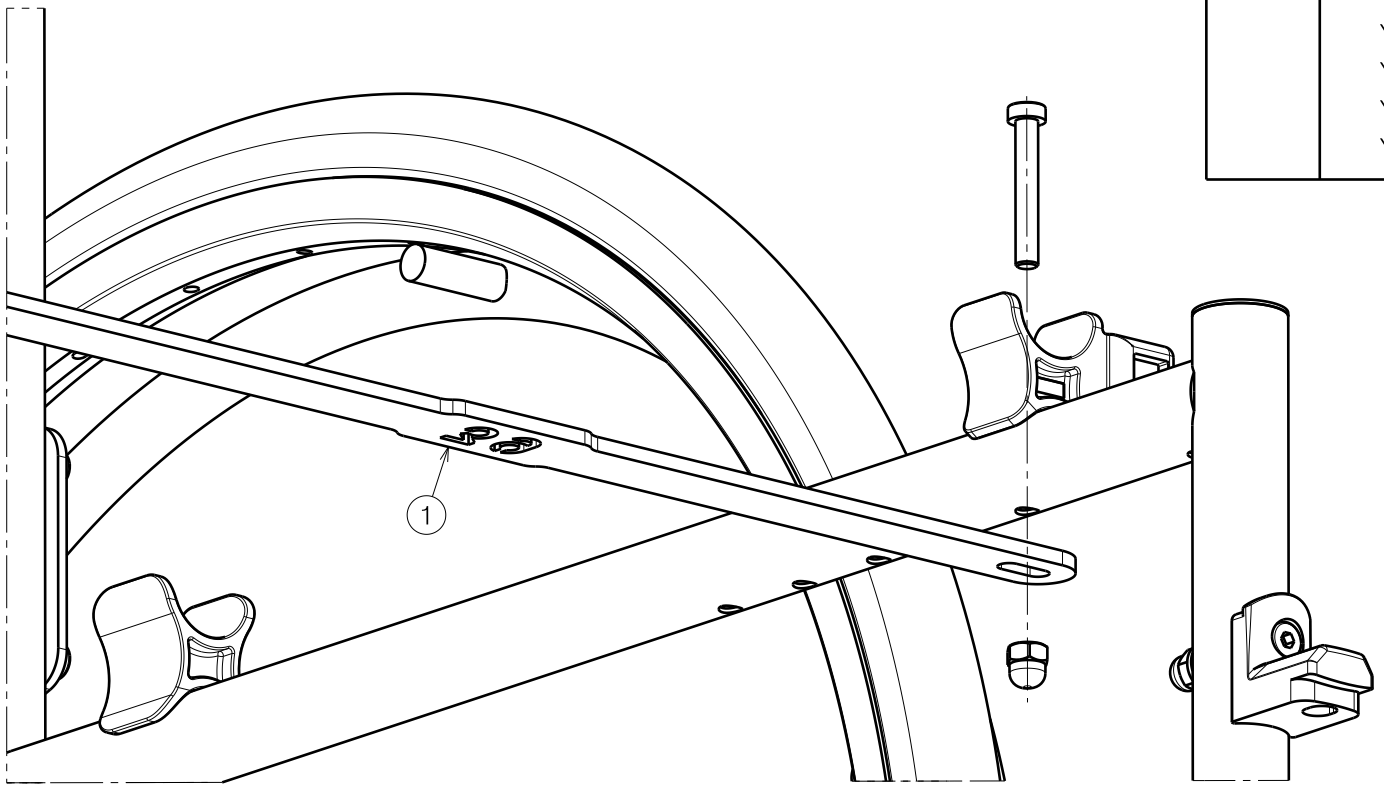

B91 FOR V AND D-SERIES				Plan No.
				E000963 / A
Scale: 1:2	Drafted	Verified	Confirmed	
Date	30/07/2014	31/07/2014	31/07/2014	
Initials	TT	TT	PJ	

E000963 / A

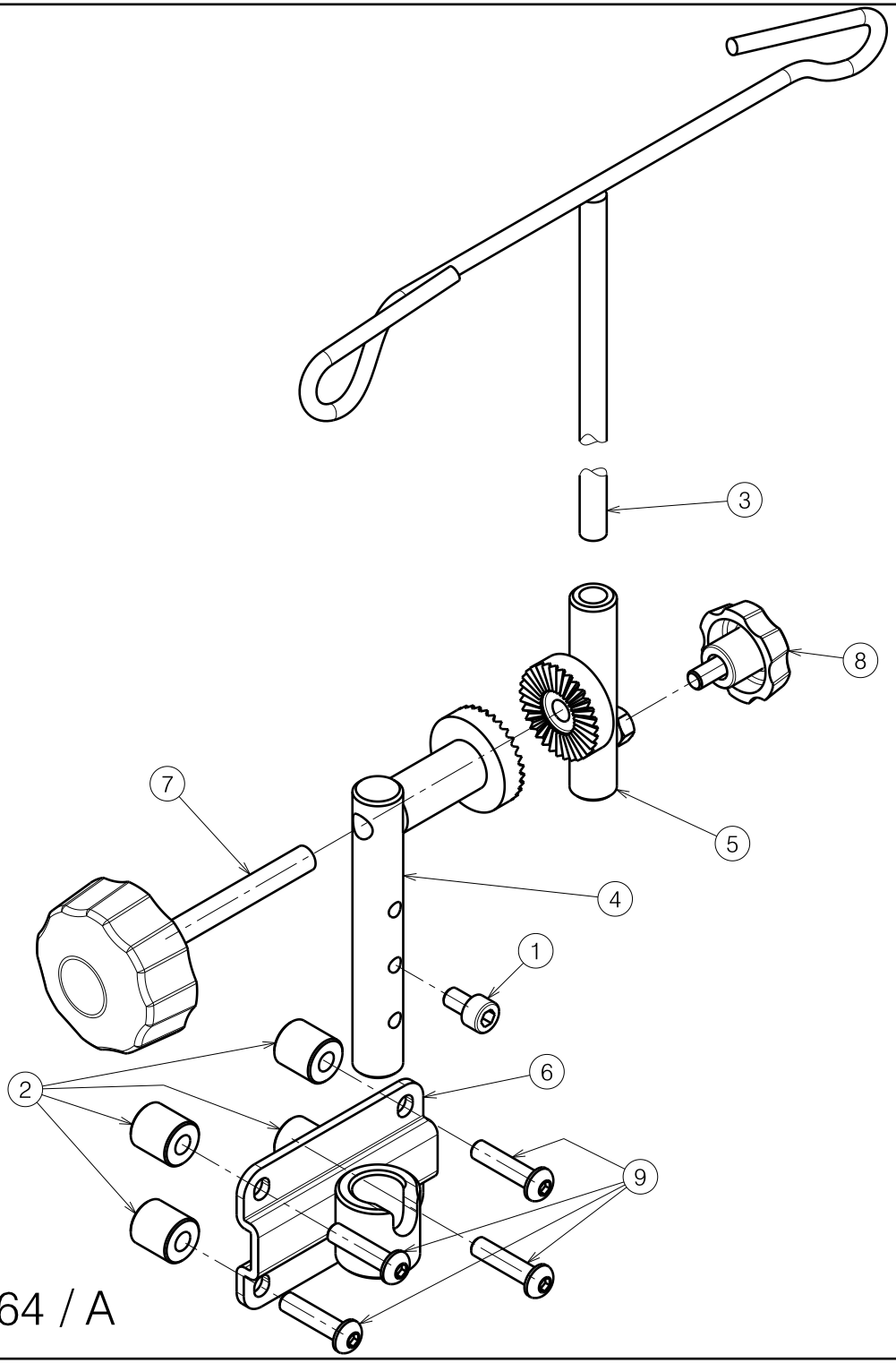

Material			
No.	Plan	Article	Quantity
1	X002112	1001491	1
2	X002616	1994159	4
3	Y005659	1425701	1
4	Y014148	1696500	1
5	Y014149	1696600	1
6	Y017298	1746354	1
7	M8x60	1001576	1
8	M6x10	1003658	1
9	M6x25 ISO7380	1006998	4

E000964 / A

INOVYS 2 B52 SERUM CARRIER				Plan No.
				E000964 / A
Scale: 1:2	Drafted	Verified	Confirmed	VERMEIREN
Date	06/08/2014	06/08/2014	06/08/2014	
Initials	SD	SD	PJ	

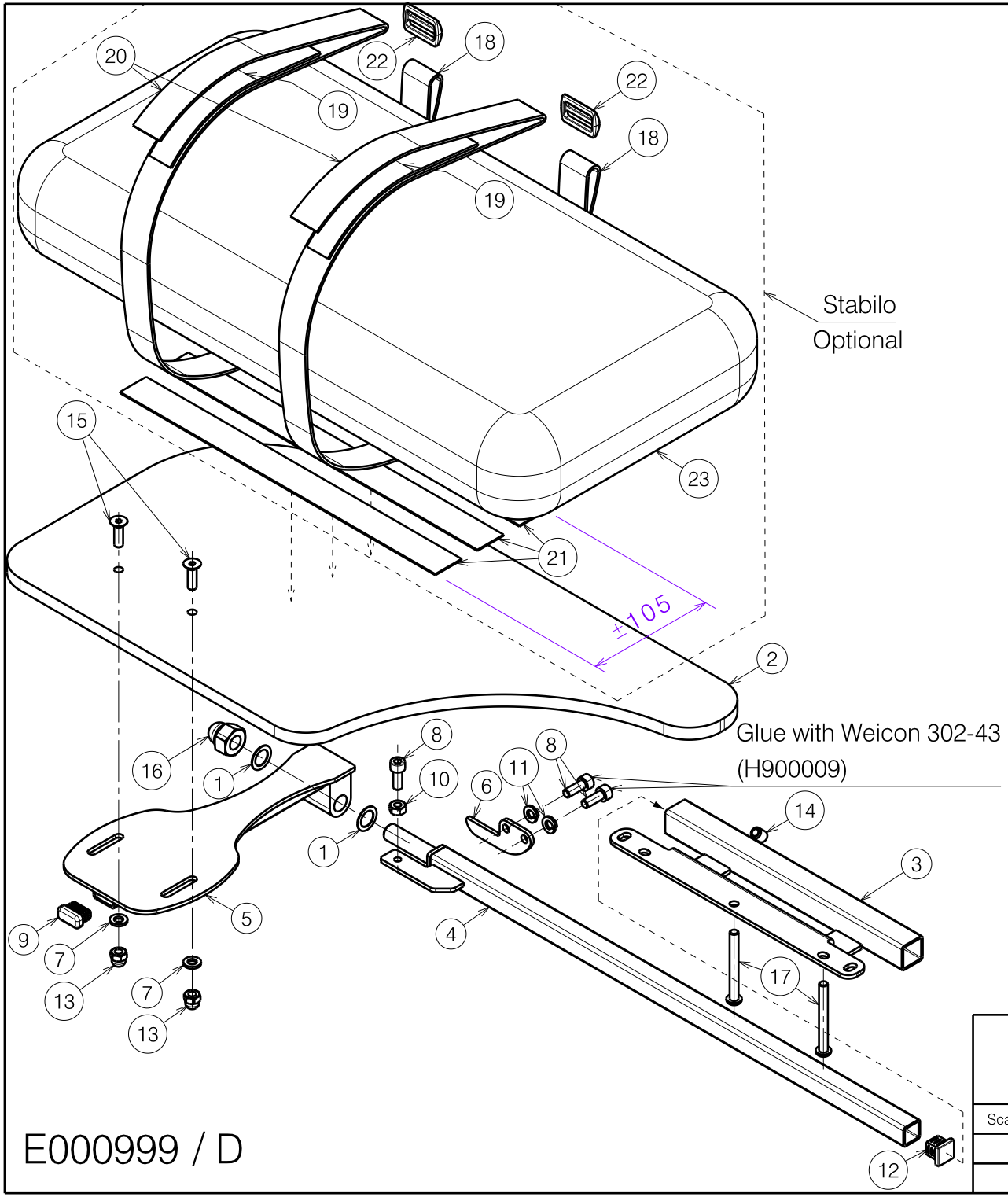

Material			
No.	Plan	Article	Quantity
1	X001653	1990509	2
2	X005534	1911901	1
3	Y021678	2016954	1
4	Y021681	2017054	1
5	Y021688	2017154	1
6	Y021920	2020354	1
7	M6 DIN125 A	1000973	2
8	M6x16 DIN912/8.8	1001492	3
9	10x20mm	1001621	1
10	M6 DIN934	1001670	1
11	M6 DIN127B	1004414	2
12	15x15mm	1005899	1
13	M6x12	1008492	2
14	M8x10 DIN916/45H	1008942	1
15	M6x20 DIN7991/8.8	1903081	2
16	M12 DIN986	1903806	1
17	M6x55	1997879	2

STABILO (Optional)			
No.	Plan	Article	Quantity
18	215/25	1009516	2x0.7
19	loop	1009709	2x0.2
20	hook	1009710	2x0.2
21	300cm	1990663	3
22	Sc/25	1991236	2
23	Stabilo L velcro	2992175	1
	Stabilo M velcro	2992176	1

PLEXI TABLE B112				Plan No.
				E000999 / D
Scale: 1:4	Drafted	Verified	Confirmed	VERMEIREN
Date	23/02/2016	30/06/2016	30/06/2016	
Initials	TT	TT	PJ	

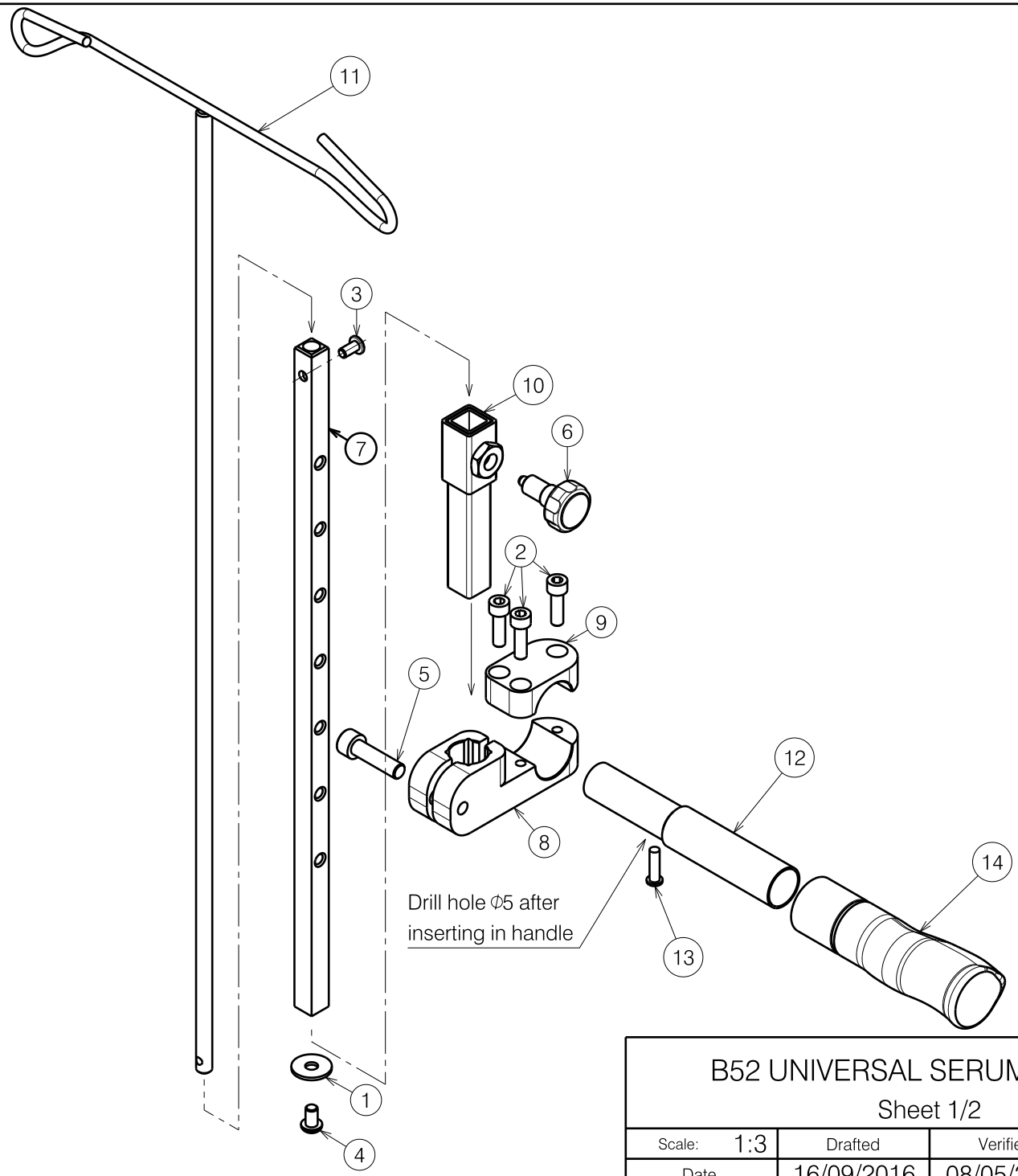

B52 UNIVERSAL SERUM CARRIER Sheet 1/2				Plan No. E001055 / H
Scale: 1:3	Drafted	Verified	Confirmed	VERMEIREN
Date	16/09/2016	08/05/2019	08/05/2019	
Initials	TT	TT	PJ	

E001055 / H

Wheelchair overview			
Model	Clamb type	Hand grip extension	Hand grip
D100	8A - 9A	12A	14C
D200	8A - 9A	12A	14C
D400	8B - 9B	12B	14B
D100 / 30°	8A - 9A	On B90	---
D200 / 30°	8A - 9A	On B90	---
D400 / 30°	8A - 9A	On B90	---
V200	8A - 9A	12C	14A
V300	8A - 9A	12C	14A
V500	8A - 9A	12C	14D
V100D	8A - 9A	12A	14A
V300 / 30°	8A - 9A	On B90	---
V200D	8B - 9B	12B	14B
V300D	8B - 9B	12B	14B
V300DL	8B - 9B	12B	14B
V100	8B - 9B	12B	14B
Eclips+	8A - 9A	12C	14A
Eclips X4	8A - 9A	12C	14A
Eclips X4 Act	8A - 9A	12C	14A
XXL	8A - 9A	12C	14A
Eclips+ 30°	8A - 9A	On B90	---
Eclips X4 30°	8A - 9A	On B90	---
Eclips X4 90°	8A - 9A	On B90	---
Eclips+ D	8A - 9A	12A	14A
708D	8A - 9A	12A	14A
Jazz+	8B - 9B	12B	14A
Jazz S50	8B - 9B	12B	14E
Inovys	8A - 9A	On lateral tube	---
EZ-1	8A - 9A	On lateral tube	---
Navix	---	Not available	---
Forest 3 L44	---	Not available	---
Timix L44	---	Not available	---
Forest 2	8A - 9A	On lateral tube	---
Tracer	8A - 9A	On lateral tube	---
Forest 3 L34 TUB	8A - 9A	On back frame	---
Forest kids	8A - 9A	On back frame	---
Timix L34 TUB	8A - 9A	On back frame	---
Springer	8A - 9A	On back frame	---
Forest 3 L34	8A - 9A	12A	14A
Timix L34	8A - 9A	12A	14A
Forest kids D	8A - 9A	12A	14A
Express VB	8A - 9A	12A	14A
Sqoud	8A - 9A	12A	14A
Rapido	8A - 9A	12A	14A

Material			
No.	Plan	Article	Quantity
1	M6 (Φ20xΦ6.5x1.6)	1997328	1
2	M6x20 DIN912/8.8	1001493	3
3	M5x10	1007063	1
4	M6x10	1900641	1
5	M8x30 DIN912	1992581	1
6	Φ25 M10x1	1999935	1
7	X005631	2036400	1
8A	XP01417	2706799 (Φ22, Φ22,2)	1
8B	X005632	2037299 (Φ25,4)	1
9A	XP01418	2706899 (Φ22, Φ22,2)	1
9B	X005633	2037399 (Φ25,4)	1
10	Y022178	2036554	1
11	Y022180	2036601	1
12A	Y018487	17711	1
12B	Y017202	17421	1
12C	Y018538	17710	1
13	Φ5x18	1001589	1
14A	---	1992600 (Φ22)	1
14B	---	1906244 (Φ25.4)	1
14C	---	3990041 (Φ22.2)	1
14D	Y022063	F007241 (Φ22)	1
14E	---	1908236 (Φ25.4)	1

B52 UNIVERSAL SERUM CARRIER Sheet 2/2				Plan No. E001055 / H
Scale: 1:3	Drafted	Verified	Confirmed	VERMEIREN
Date	16/09/2016	08/05/2019	08/05/2019	
Initials	TT	TT	PJ	

E001055 / H

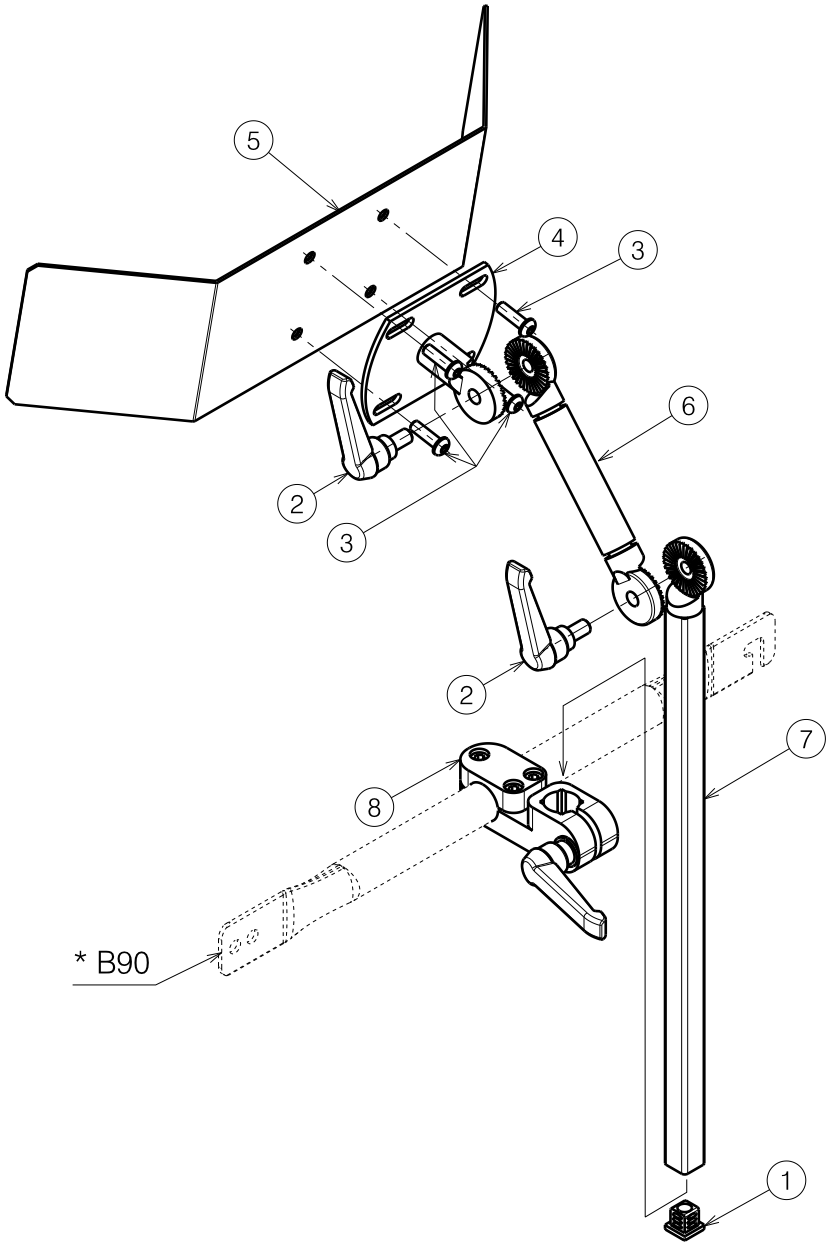

Material			
No.	Plan	Article	Quantity
1	15x15	1005899	1
2	HV8x15	1006661	2
3	M6x20	1006999	4
4	Y003414	1463354	1
5	Y003416	B000272	1
6	Y022394	2039404	1
7	Y022395	2039504	1
8	EP00216_1	1913740	1

* B90 to order separately

1912882

E001064 / B

B47 HEADREST UNIVERSAL				Plan No.
				E001064 / B
Scale: 1:4	Drafted	Verified	Confirmed	VERMEIREN
Date	21/12/2016	30/06/2017	30/06/2017	
Initials	TT	TT	PJ	

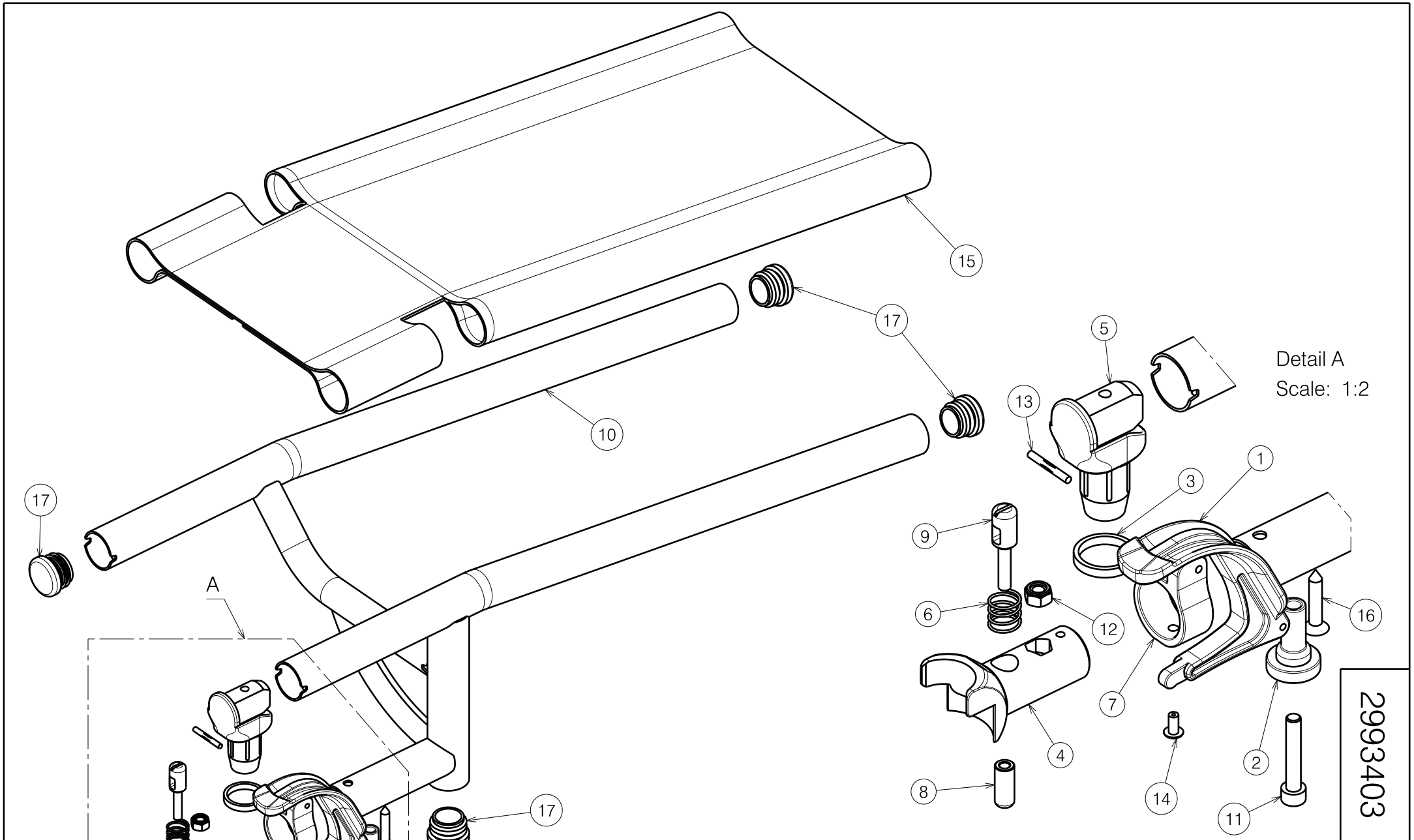

BP7 CAST SUPPORT D-SERIES Sheet 1/2				Plan No. E001067/ B
Scale: 1:3	Drafted	Verified	Confirmed	
Date	23/12/2016	10/01/2017	10/01/2017	
Initials	SD	SD	PJ	

Material							
No.	Plan	Article	Quantity	No.	Plan	Article	Quantity
1	X004418	1904207	1	10	Y022121	2038954 (L)	1
2	X004660	1905195	1		Y022122	2039054 (R)	1
3	X005600	1912884	1	11	M6x35 DIN912	1001496	1
4	XC00129	3990491	1	12	M6 DIN985	1001680	1
5	XC00132	3990518	1	17	Φ25	1001608	4
6	XC00142	3990576	1	13	Φ3x24 DIN1475	1905640	1
7	XC00300	3991091	1	14	Φ4x8	1992805	1
8	XC00304	3991093	1	15	---	1912946	1
9	XC00305	3991094	1	16	---	H016007	1

2993403

BP7 CAST SUPPORT D-SERIES Sheet 2/2				Plan No. E001067 / B
Scale: 1:3	Drafted	Verified	Confirmed	
Date	23/12/2016	10/01/2017	10/01/2017	
Initials	SD	SD	PJ	

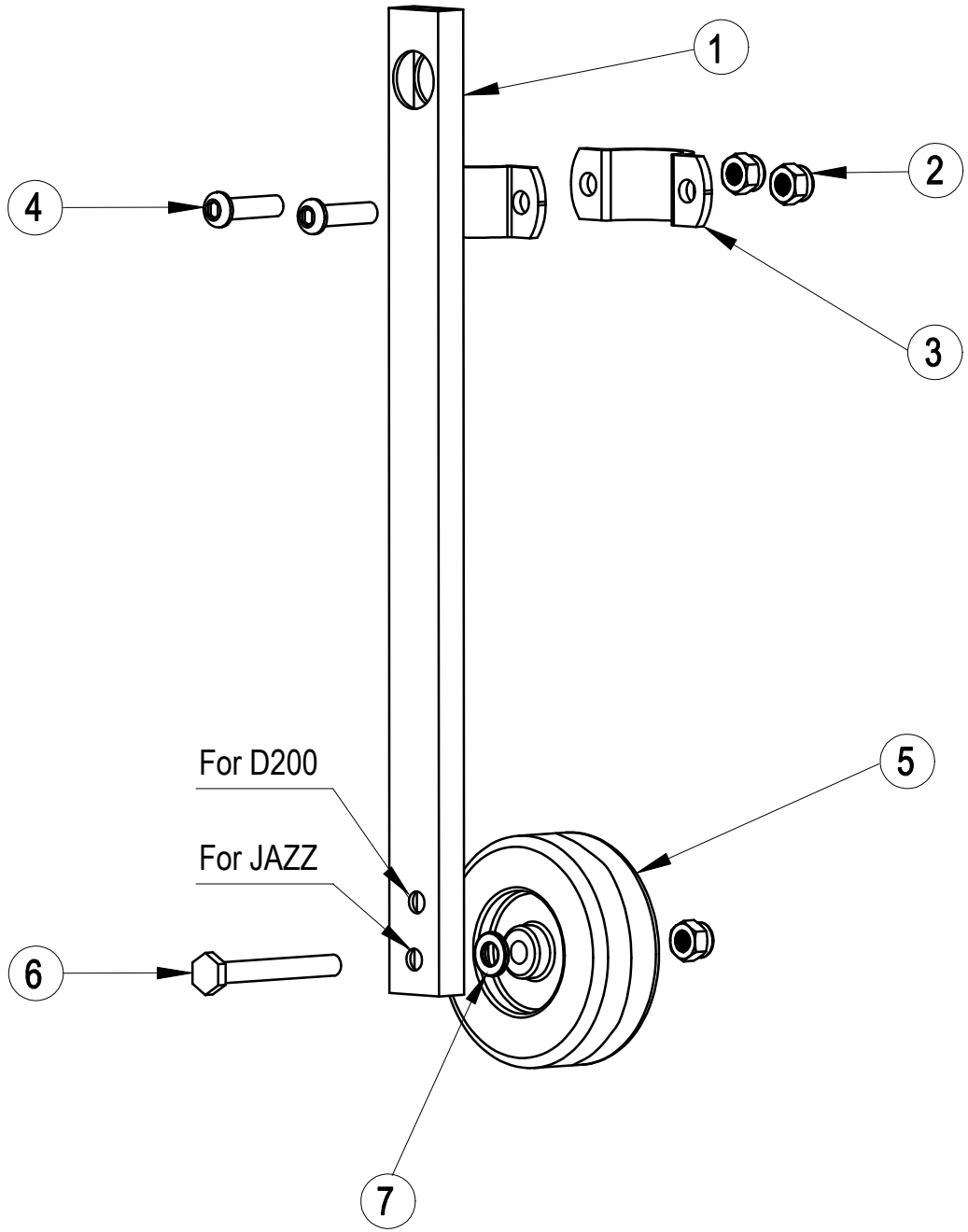

No.	Plan	Article	Number
1	Y004362	1506154	1
2	---	1001680	3
3	Y002783	1436154	1
4	---	1006999	2
5	---	1005280	1
6	---	1001435	1
7	---	1001564	1

B86 TRAVEL WHEELS JAZZ/D200 C5 (A PIECE)				Plan No. / Plannr.
				EC00018/E
Scale / Schaal: 1:5	Drafted / Getekend	Verified / Nagezien	Confirmed / Bevestigd	VERMEIREN
Date / Datum	21/11/2014	17/02/2021	17/02/2021	
Init. / Init.	Betty	Anna	JJQ	

EC00018/E

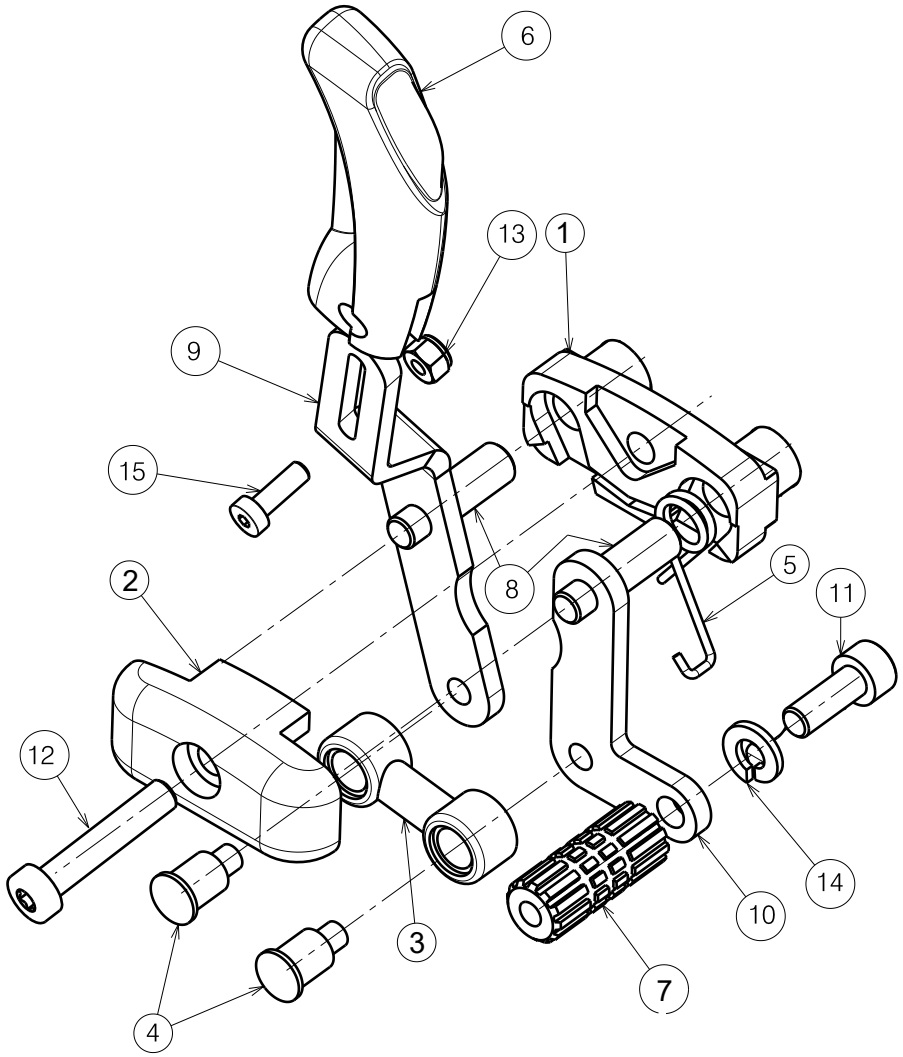

Material			
No.	Plan	Article	Quantity
1	X002139	1992426	1
2	X002140	1992427	1
3	X002141	1992435	1
4	X002165	1488300	2
5	X005305	1910032	1
6	X004719	1907581	1
7	X005274	17937	1
8	X005276	1793900	2
9	Y017665	1763854	1
10	Y020193	1794054	1
11	M6x16 DIN912	1001492	1
12	DIN6912 M6X35	3991947	1
13	M4 DIN985	1001678	1
14	M6 DIN127	1004414	1
15	M4x12 DIN7984	1907582	1

3991651

EC00237/B

B40 BRAKE LEFT 2014				Plan No. / Plannr.
				EC00237/B
Scale / Schaal: 1:2	Drafted / Getekend	Verified / Nagezien	Confirmed / Bevestigd	VERMEIREN
Date / Datum	02/09/2014	02/09/2014	02/09/2014	
Init. / Init.	Betty	JJQ	TG	

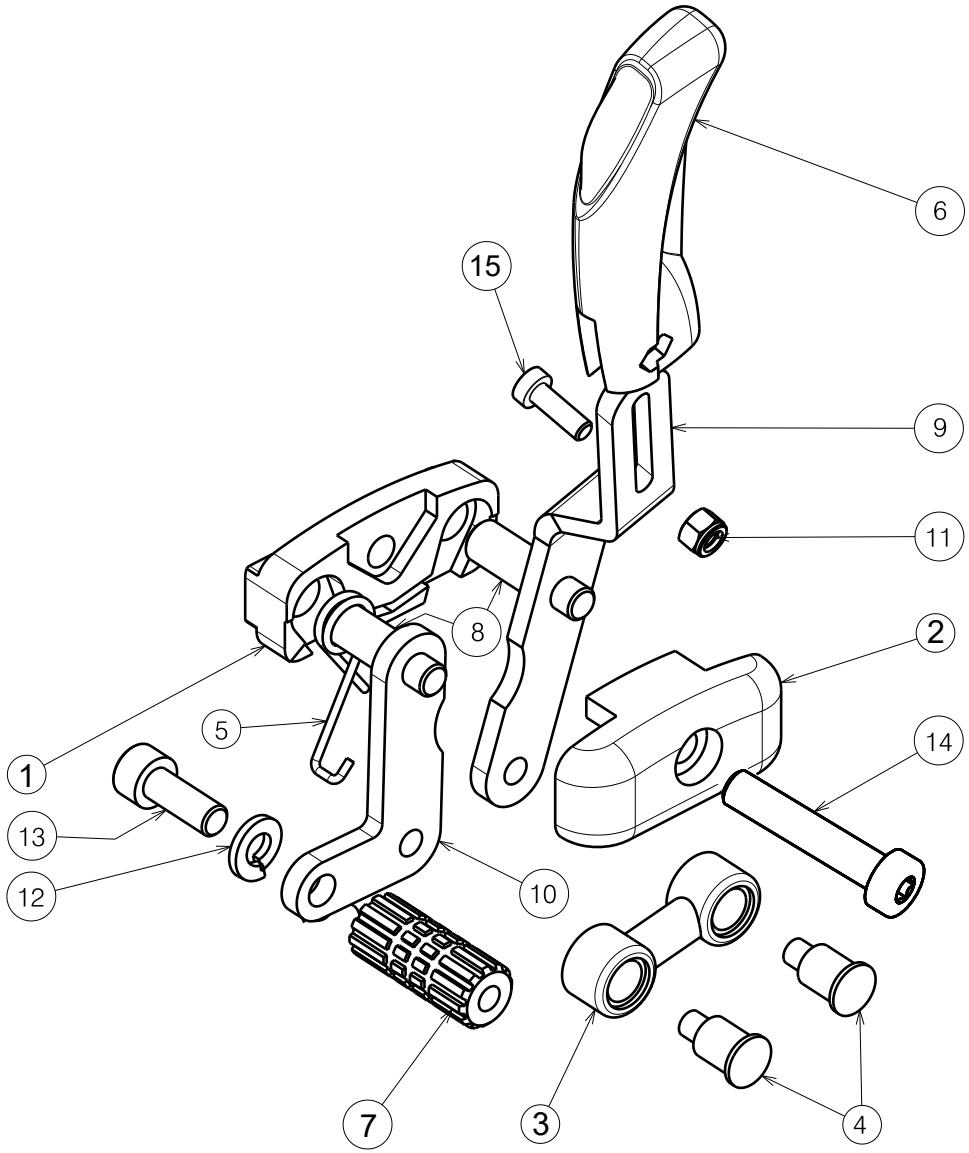

Material			
No.	Plan	Article	Quantity
1	X002139	1992426	1
2	X002140	1992427	1
3	X002141	1992435	1
4	X002165	1488300	2
5	X005306	1910033	1
6	X004719	1907581	1
7	X005274	17937	1
8	X005276	1793900	2
9	Y017664	1763954	1
10	Y020193	1794054	1
11	M4 DIN985	1001678	1
12	M6 DIN127	1004414	1
13	M6x16 DIN912	1001492	1
14	DIN6912 M6X35	3991947	1
15	M4x12 DIN7984	1907582	1

3991652

B40 BRAKE RIGHT 2014				Plan No. / Plannr.
				EC00238/B
Scale / Schaal: 1:2	Drafted / Getekend	Verified / Nagezien	Confirmed / Bevestigd	
Date / Datum	02/09/2014	02/09/2014	02/09/2014	
Init. / Init.	Betty	JJQ	TG	

EC00238/B

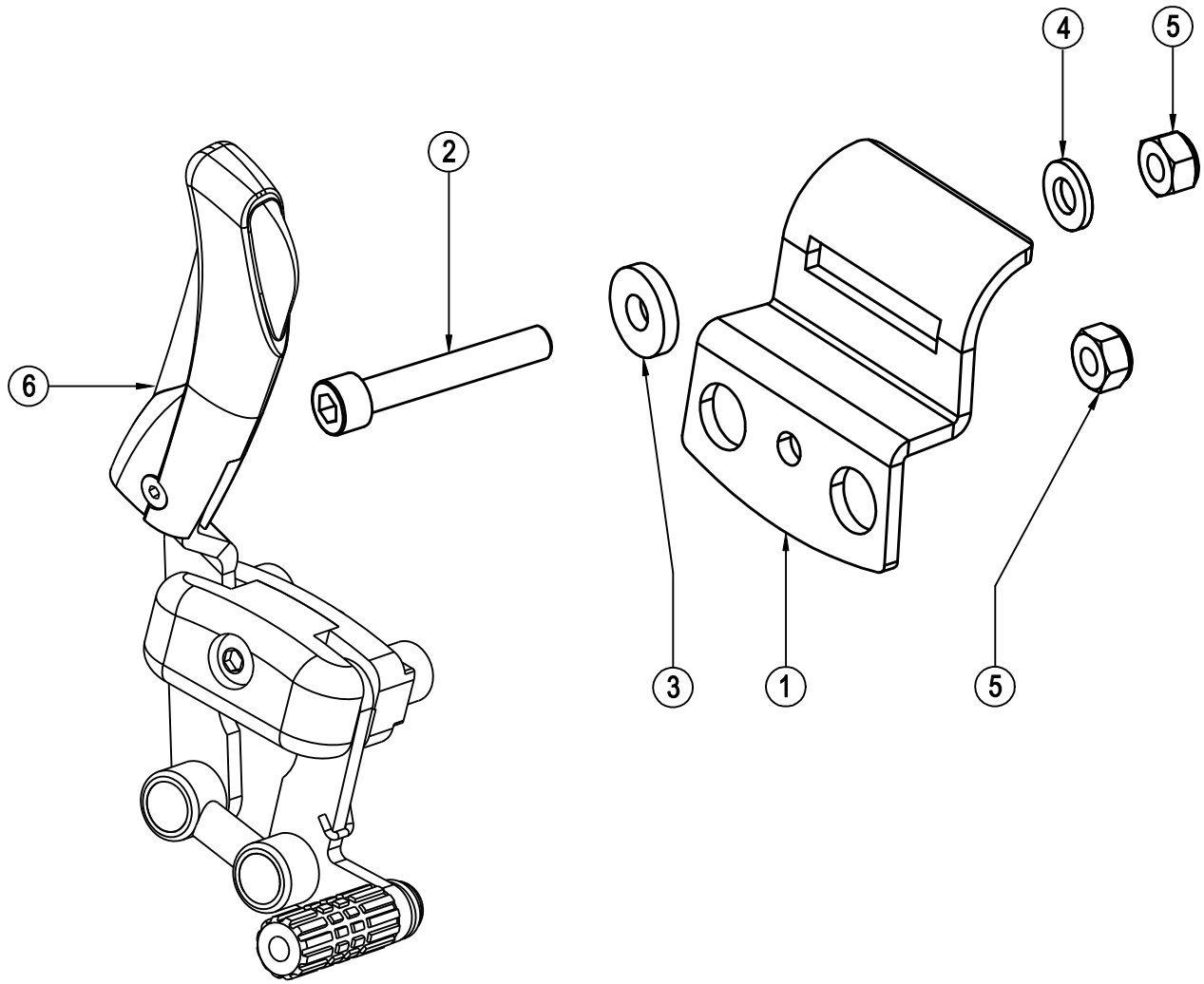

Material			
NO.	Plan	Article	Number
1	YC00397	1C17654	1
2	---	1003909	1
3	---	1003321	1
4	---	1001564	1
5	---	1001680	2
6	EC00237	3991651	1

EC00239/A

B40 BRAKE LEFT D100/D200 2014				Plan No. / Plannr.
				EC00239/A
Scale / Schaal: 1 : 1	Drafted / Getekend	Verified / Nagezien	Confirmed / Bevestigd	VERMEIREN
Date / Datum	02/09/2014	02/09/2014	02/09/2014	
Init. / Init.	Betty	JJQ	TG	

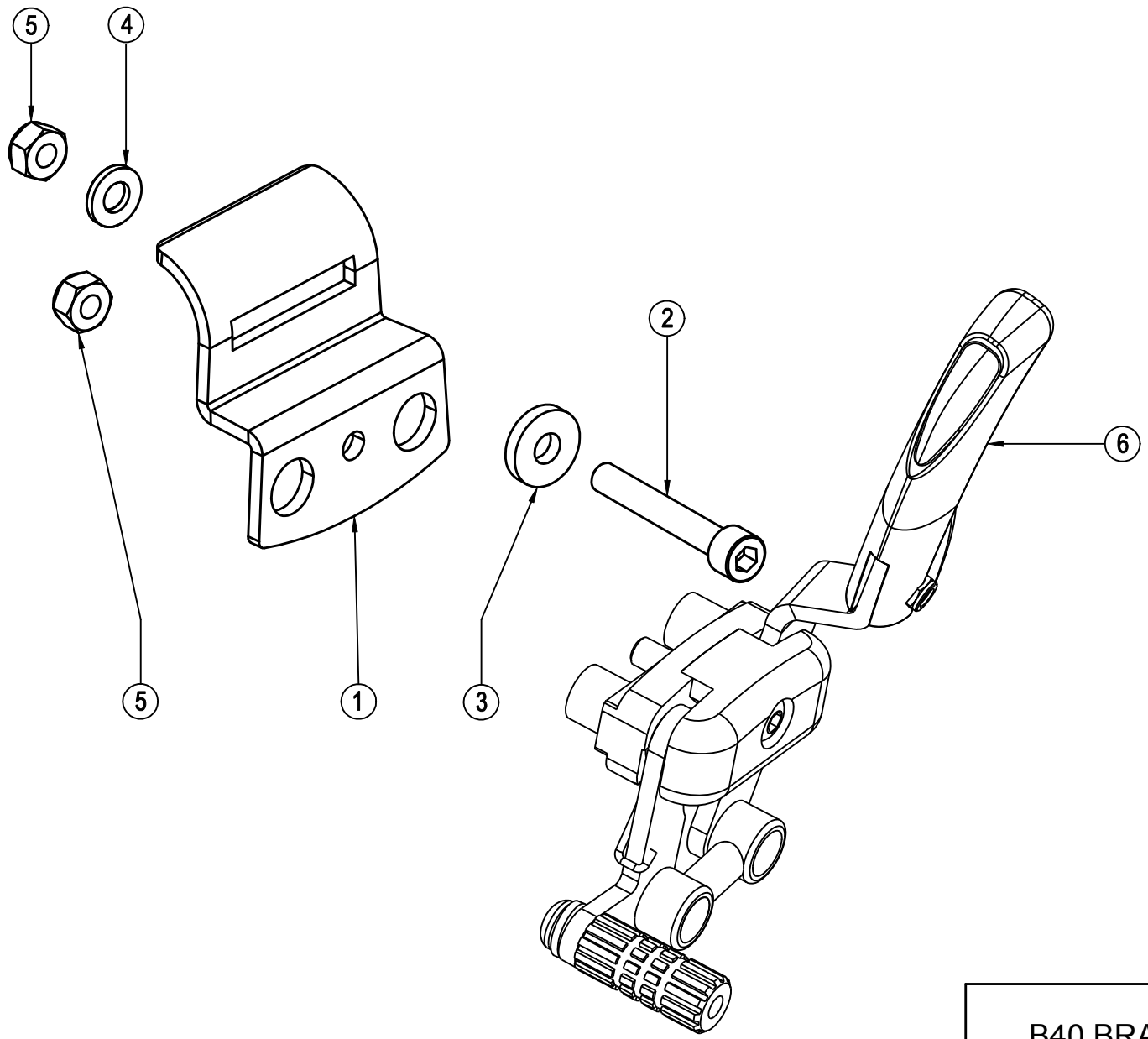

Material			
NO.	Plan	Article	Number
1	YC00397	1C17654	1
2	---	1003909	1
3	---	1003321	1
4	---	1001564	1
5	---	1001680	2
6	EC00238	3991652	1

EC00240/A

B40 BRAKE RIGHT D100/D200 2014				Plan No. / Plannr.
				EC00240/A
Scale / Schaal: 1 : 1	Drafted / Getekend	Verified / Nagezien	Confirmed / Bevestigd	VERMEIREN
Date / Datum	02/09/2014	02/09/2014	02/09/2014	
Init. / Init.	Betty	JJQ	TG	

Material			
No.	Plan	Article	Quantity
1	X002437	1992699	2
2	X003662	1998693	2
3	X002265	1500054	2
4	Y017193	1743854	4
5	EC00194	3991488 (L)	1
	EC00196	3991489 (R)	1
6	---	1001564	8
7	---	1003109	4
8	---	1008492	4
9	---	1905243	2
10	---	1993237	2

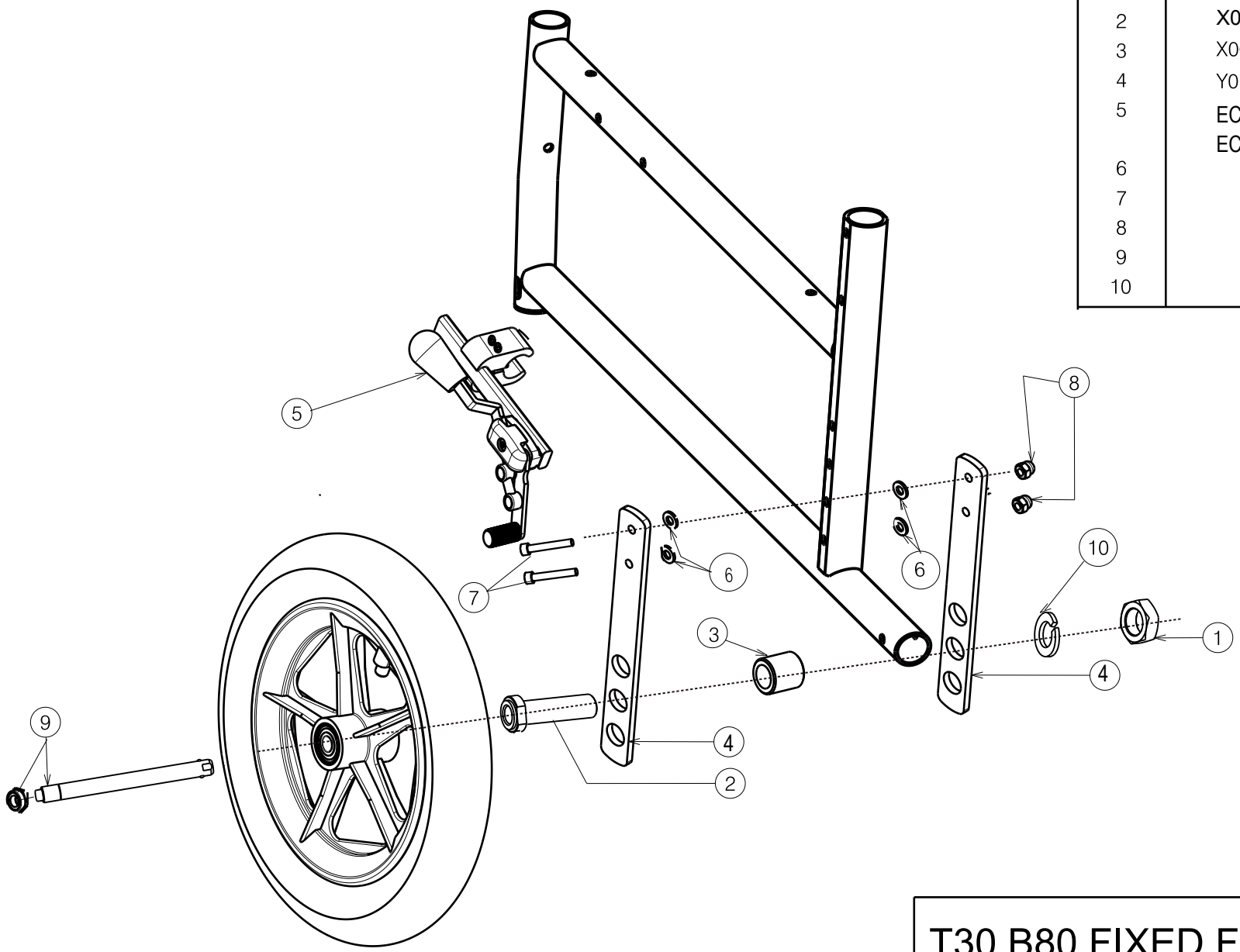

Left side only depicted

T30 B80 FIXED FOR D100/D200				Plan No.
				EC00241/A
Scale: 1:4	Drafted	Verified	Confirmed	
Date	05/09/2014	05/09/2014	05/09/2014	
Initials	Betty	JJQ	TG	

EC00241/A

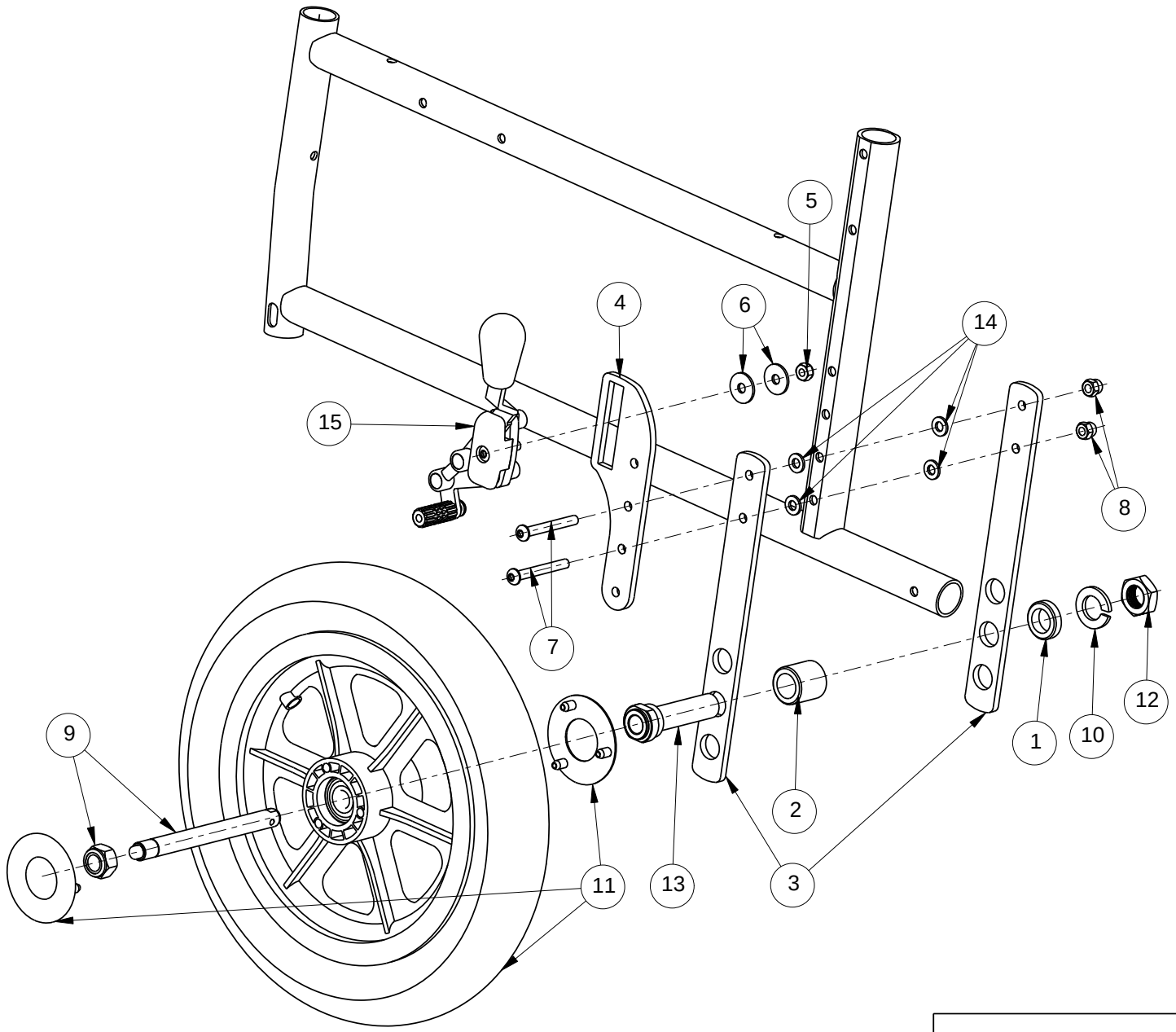

Material			
No.	Plan	Article	Number
1	X000203	G000791	2
2	X002265	1500054	2
3	Y017193	1743854	4
4	Y021061	2008654	2
5	---	1001680	2
6	---	1997328	4
7	---	1006997	4
8	---	1008492	4
9	---	1905243	2
10	---	1911653	2
11	---	3991378	2
12	X002437	1992699	2
13	X003662	1998693	2
14	M6 DIN125(For D200)	1001564	8
	M6 DIN7349(For D100)	1003321	8
15	EC00247(L)	3991715	1
	EC00248(R)	3991716	1

Left side only depicted

EC00279/A

T30 B80 FIXED FOR D100/D200				Plan No.
				EC00279/A
Scale:1:4	Drafted	Verified	Confirmed	VERMEIREN
Date	27/07/2015	27/07/2015	27/07/2015	
Init.	SL	Mars	TG	

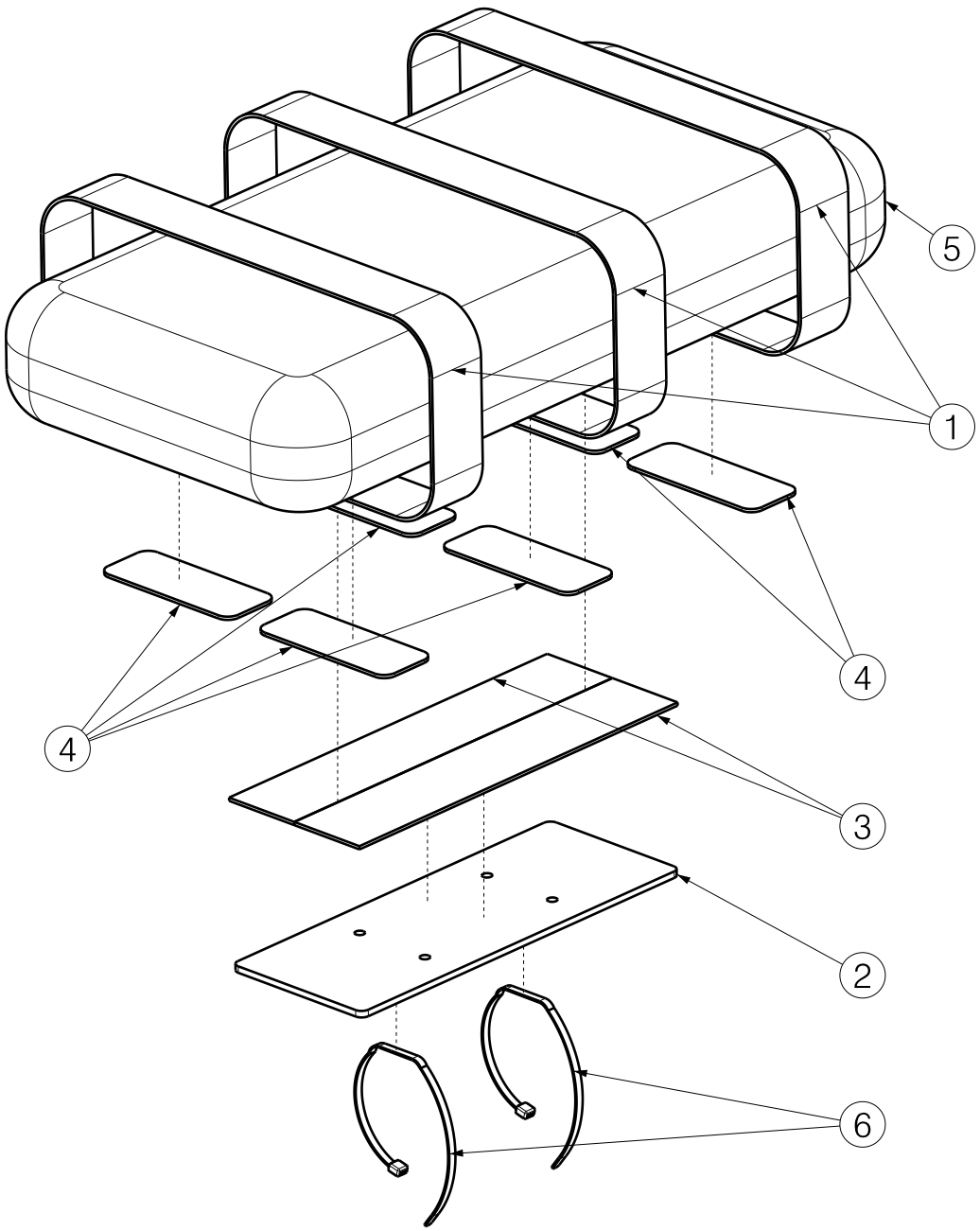

Material			
No.	Plan	Article	Quantity
1	YP04769	2992736	3
2	XP01252	2992735	1
3	---	1903425	2 x 0.26 m
4	---	1905877	6 x 0.1 m
5	---	2992175 (L)	1
	---	2992176 (M)	1
6	---	W620150	2

EP00149 / B

EXPLODED VIEW B66 STABILO				Plan No.
				EP00149/ B
Scale: 1:1	Drafted	Verified	Confirmed	VERMEIREN
Date	14/04/2014	09/07/2014	09/07/2014	
Initials	WM	AZ	TK	

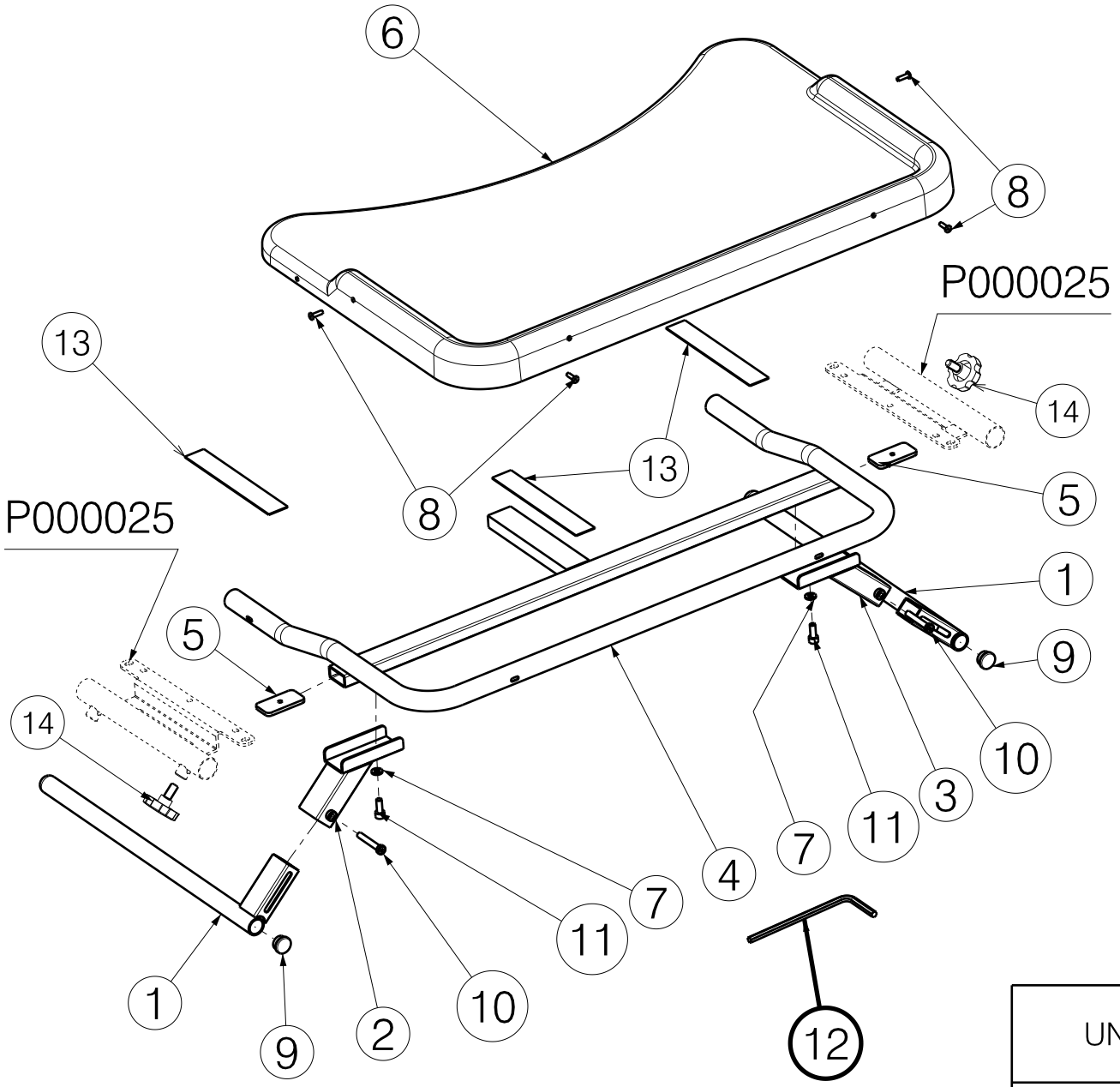

Material			
No.	Plan	Article	Quantity
1	YP04995	2896000	2
2	YP04998	2896154	1
	YP07057*	2744254	1
3	YP05000	2896254	1
	YP07058*	2744354	1
4	YP05002	2896354	1
5	YP05003	2896400	2
6	XP01338	2992968	1
7	D12.5XD6.4X1.6	1000973	2
8	Rivet 4X14	1001584	4
9	---	1001602	2
10	M6X40 DIN 912	2990778	2
11	M6x16	1001492	2
12	Allen Key 5	W620228	1
13	---	1990663	3 x 0.1 m
14	---	2990024	2

* use for comfort chair

EP00190 / M

UNIVERSAL ADJUSTABLE TABLE B15				Plan No.
				EP00190/ M
Scale: 1:7	Drafted	Verified	Confirmed	VERMEIREN
Date	15/12/2014	26/09/2019	26/09/2019	
Initials	WM	DB	TK	

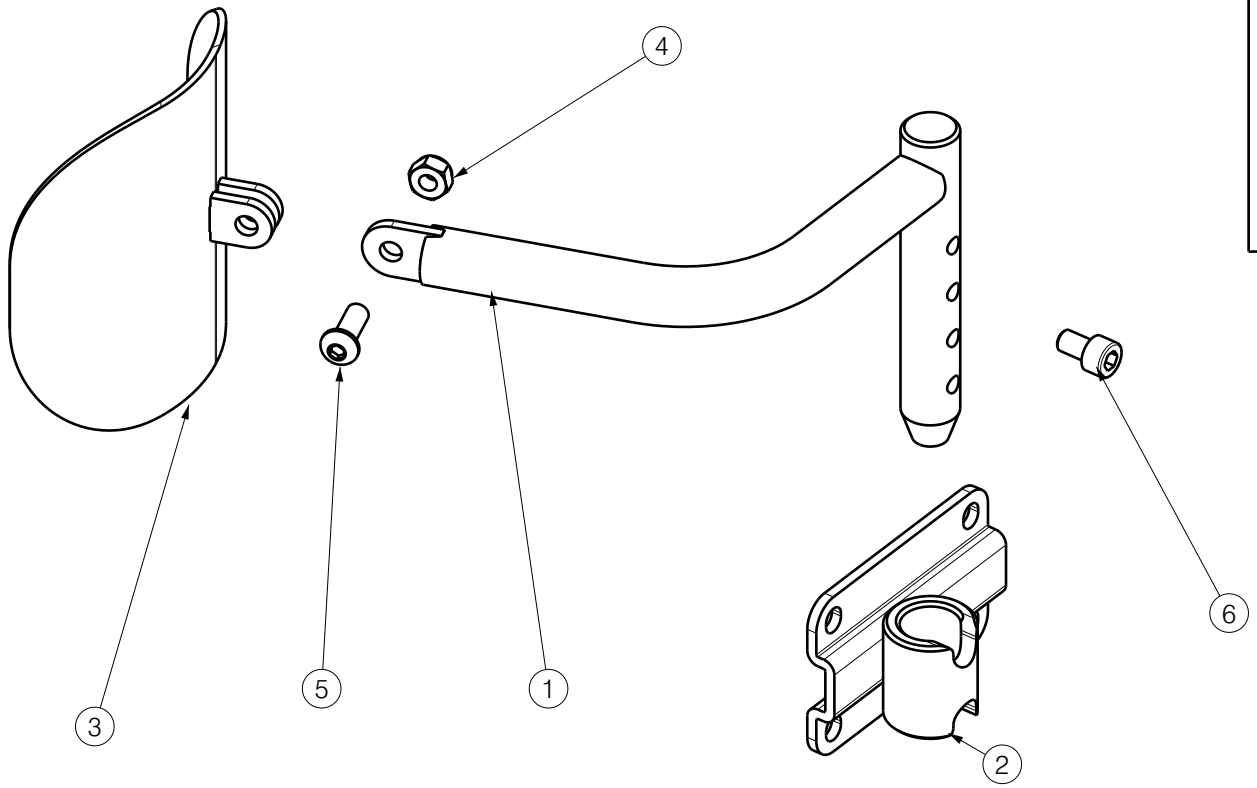

Material			
No.	Plan	Article	Quantity
1	YP08732	2626754 (L)	1
	YP08731	2626654 (R)	1
2	YP08719	2625854	1
3	YP08727	2626054	1
4	M6 DIN985	1001680	1
5	M6x16 ISO7380	1008459	1
6	M6x10 DIN912	1001491	1

Only left side depicted

EP00516 / B

B67 ASSEMBLY (ELBOW PROTECTION)				Plan No.
				EP00516/ B
Scale: 1:2	Drafted	Verified	Confirmed	VERMEIREN
Date	18/02/2021	26/02/2021	26/02/2021	
Initials	KS	DB	TK	

Material			
No.	Plan	Article	Quantity
1	---	2996910	1

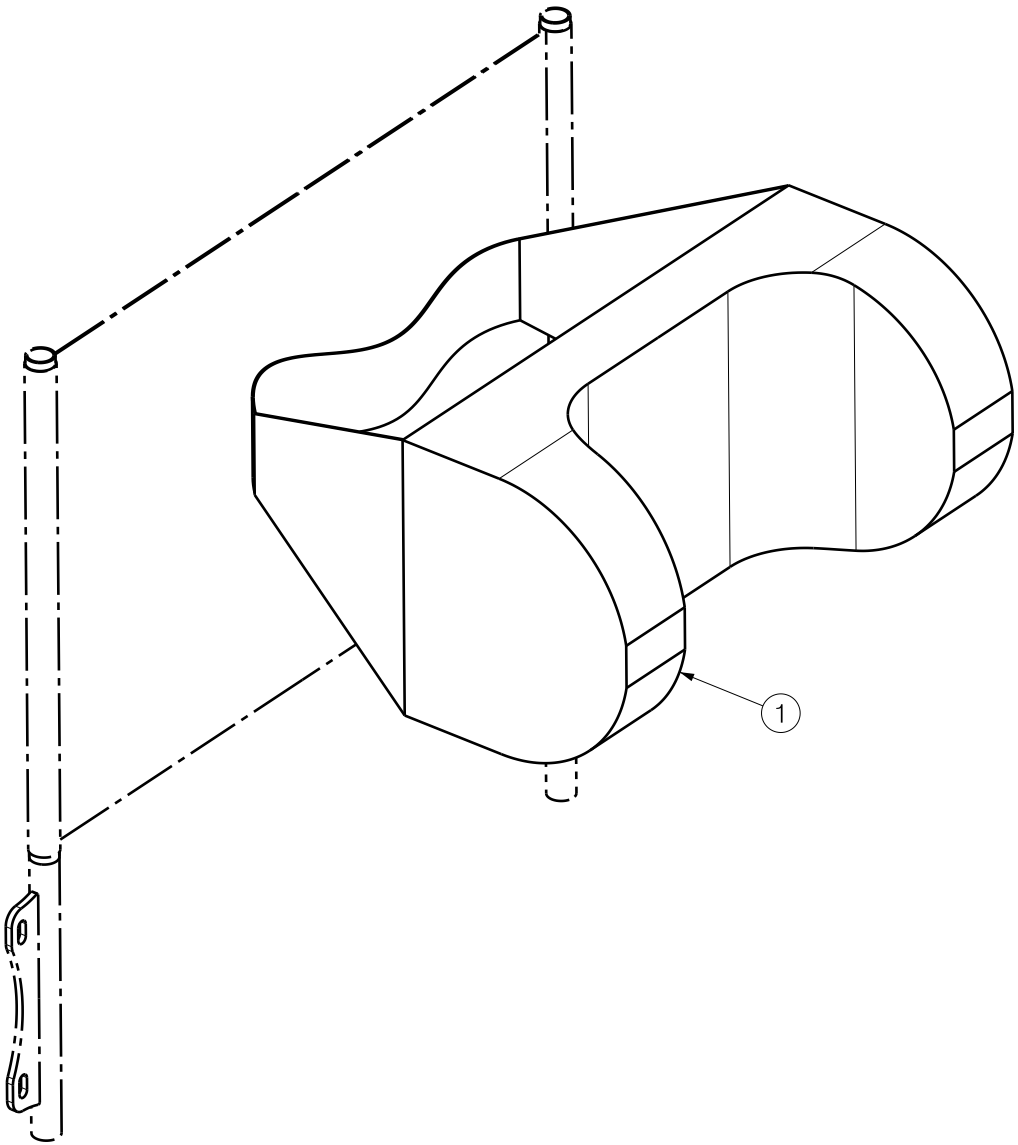

EP00572 / A

B14C V-Series				Plan No.
				EP00572/ A
Scale: 1:1	Drafted	Verified	Confirmed	
Date	24/02/2021	24/02/2021	24/02/2021	
Initials	DB	PM	TK	

Overview					
Model	Type	Article	Plan number	Old article	Old plan number
A	B02 V-series B03 V-series	2008754	Y021062	1785254 1739854 1739854	Y019321 Y016846 Y016846
B	B05 V-series B04 V-series Timix GT Timix / Forest 3 Inovys Navix Forest / Express Ascend EZ-1	1785254	Y019321	1758854 1758854 --- --- --- 1669954 1671554 1671554 1671554	Y017854 Y017854 --- --- --- Y012236 Y012536 Y012536 Y012536
C	B02 708D B03 708D B02 Eclips B03 Eclips	1779054	Y018970	1381504 1378304 1553654 1553954	Y002529 Y002524 Y005617 Y005627
D	B05 708D B05 Eclips	1548354	Y005478		
E	Serenys Serenys 917* Alesia Comfort chair	1608254 1662354 1690374 1671982 / 1672082	Y007792 --- Y014119 Y012628 Y012629		
F	B04 V-series BI5 V-series	2019454	Y021909		

* Not depicted

Eclips X4 kids -- E000911; Forest Kids / Springer -- E000912

Wooden table: E000538

Plexi table manual wheelchair: E000633

Plexi table electro: E000744

Plastic table B15A: EP00190

UNIVERSAL B13 2013				Plan No.
				P000025 / E
Scale: 1:8	Drafted	Verified	Confirmed	
Date	20/03/2013	26/09/2017	26/09/2017	
Initials	SD	SD	PJ	

P000025 / E

Material / Materiaal - Model A			
No. / Nr.	Plan	Article / Artikel	Quantity / Aantal
1	Y021062	2008754	2
2	M8x16	2990024	2
3	M6 DIN125A	1001564	4
4	M6x60	1992915	4

*For B15A table (EP00190) double the quantity

Model A

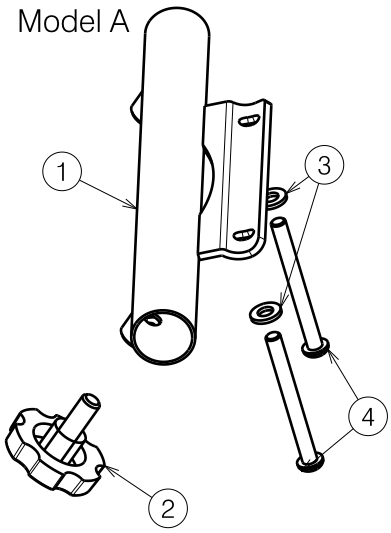

Model B - V-series

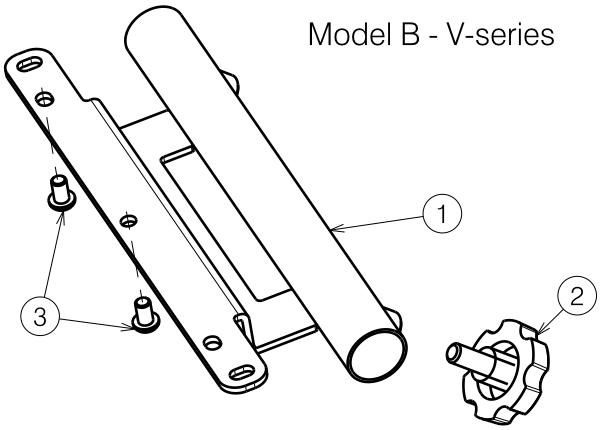

Material / Materiaal - Model B V-series			
No. / Nr.	Plan	Article / Artikel	Quantity / Aantal*
1	Y019321	1785254	1
2	M8x16	2990024	1
3	M6x10	1900641	2

*For B15A table (EP00190) double the quantity

Material / Materiaal - Model B Electro / Inovys			
No. / Nr.	Plan	Article / Artikel	Quantity / Aantal*
1	Y019321	1785254	1
2	M8x16	2990024	1
3A	M6x16	1008459	2
3B	M6x20	1006999	2
3C	M6x30	1900641	2
3D	M6x60	1992915	2

*For B15A table (EP00190) double the quantity

3A: Timix GT / Timix / Forest 3

3B: EZ1

3C: Inovys / Navix

3D: Ascend / Forest / Express

Model B - Electro / Inovys

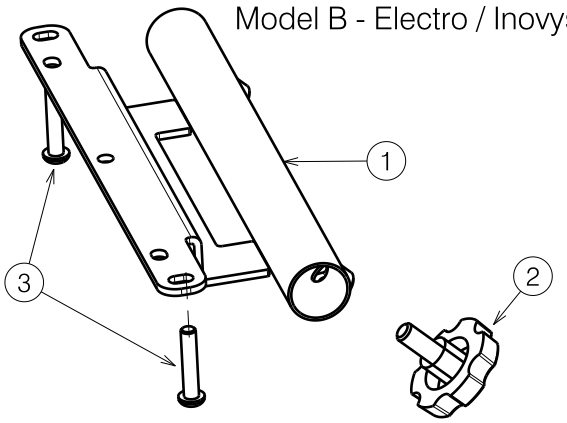

UNIVERSAL B13 2013				Plan No.
				P000025 / E
Scale: 1:3	Drafted	Verified	Confirmed	
Date	20/03/2013	26/09/2017	26/09/2017	
Initials	SD	SD	PJ	

P000025 / E

Model C - 708D

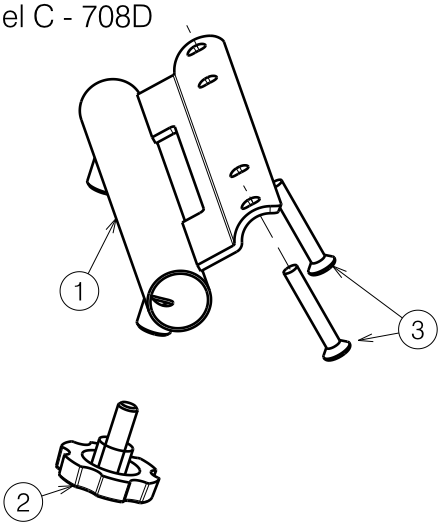

Material / Materiaal - Model C 708D			
No. / Nr.	Plan	Article / Artikel	Quantity / Aantal*
1	Y016846	1739854	1
2	M8x16	2990024	1
3	M6x40 DIN966	1009803	2

*For B15A table (EP00190) double the quantity

Model C - Eclips / Jazz

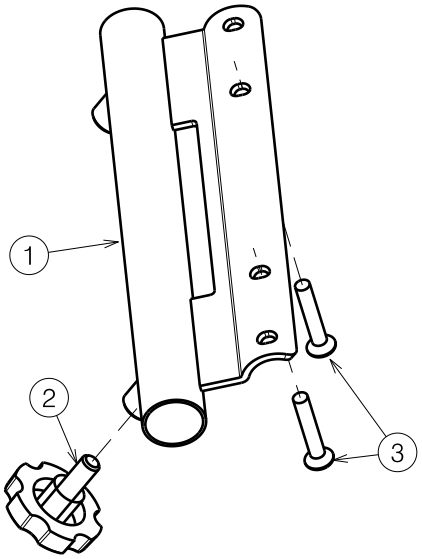

Material / Materiaal - Model C Eclips / Jazz			
No. / Nr.	Plan	Article / Artikel	Quantity / Aantal*
1	Y021062	2008754	1
2	M8x16	2990024	1
3	M6x35 DIN966	1003903	2

*For B15A table (EP00190) double the quantity

Model D

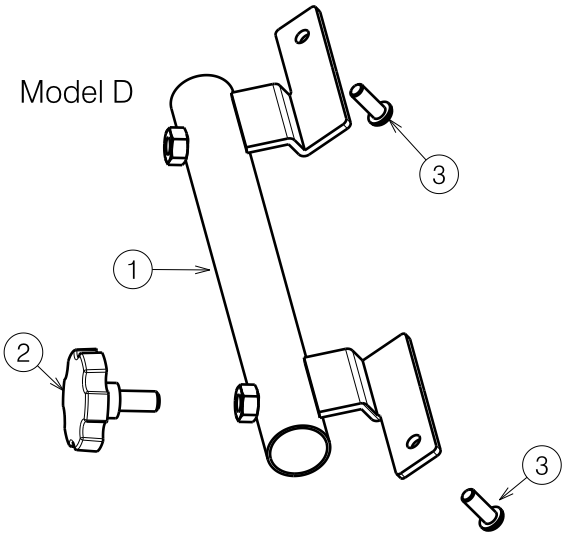

Material / Materiaal - Model D			
No. / Nr.	Plan	Article / Artikel	Quantity / Aantal*
1	Y019321	1785254	1
2	M8x16	2990024	1
3	M6x16	1008459	2

*For B15A table (EP00190) double the quantity

UNIVERSAL B13 2013				Plan No.
				P000025 / E
Scale: 1:3	Drafted	Verified	Confirmed	
Date	20/03/2013	26/09/2017	26/09/2017	
Initials	SD	SD	PJ	

P000025 / E

Model E - Serenys

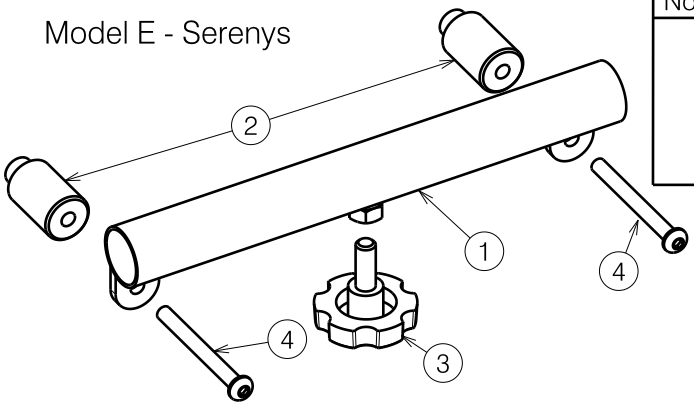

Material / Materiaal - Model E Serenys			
No. / Nr.	Plan	Article / Artikel	Quantity / Aantal*
1	Y007792	1608254	1
2	X003344	1996908	2
3	M8x20	1001580	1
4	M6x60	1992915	2

*For B15A table (EP00190) double the quantity

Model E - Alesia

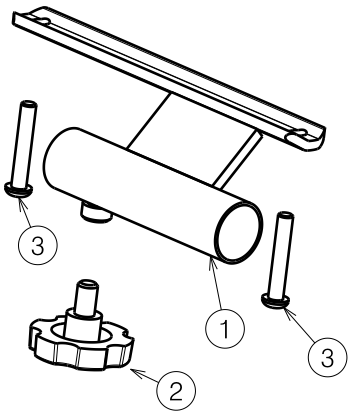

Material / Materiaal - Model E Alesia			
No. / Nr.	Plan	Article / Artikel	Quantity / Aantal*
1	Y014119	1690374	1
2	M8x12	1999934	1
3	M6x35	1006057	2

*For B15A table (EP00190) double the quantity

Model E Comfort chair

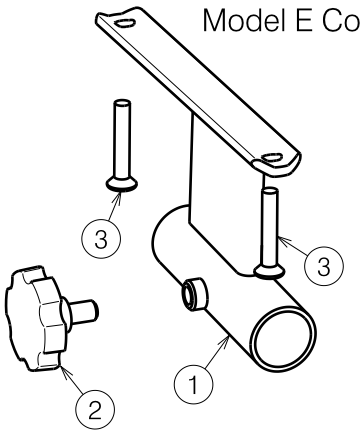

Material / Materiaal - Model E Comfort chair			
No. / Nr.	Plan	Article / Artikel	Quantity / Aantal*
1	Y012628 (L)	1671982	1
	Y012629 (R)	1672082	1
2	M8x12	1999931	2
3	M6x35 DIN966	1003903	2

*For B15A table (EP00190) double the quantity

Material / Materiaal - Model F			
No. / Nr.	Plan	Article / Artikel	Quantity / Aantal*
1	Y019321	1785254	1
2	M8x16	2990024	1

*For B15A table (EP00190) double the quantity

Model F

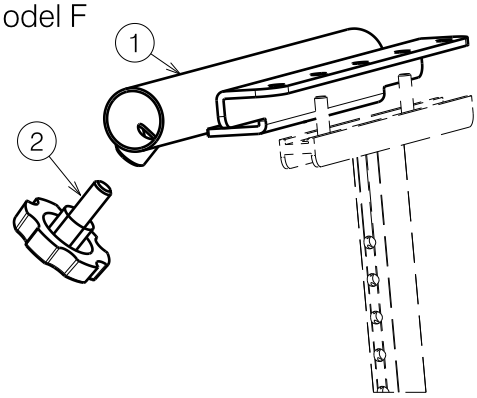

P000025 / E

UNIVERSAL B13 2013				Plan No.
				P000025 / E
Scale: 1:3	Drafted	Verified	Confirmed	
Date	20/03/2013	26/09/2017	26/09/2017	
Initials	SD	SD	PJ	

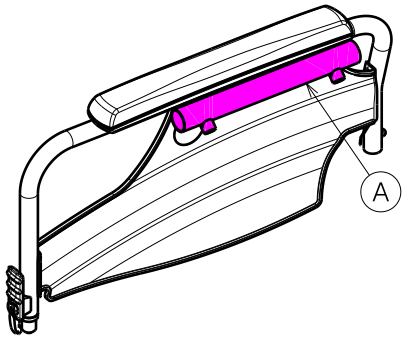

B02 V-SERIES

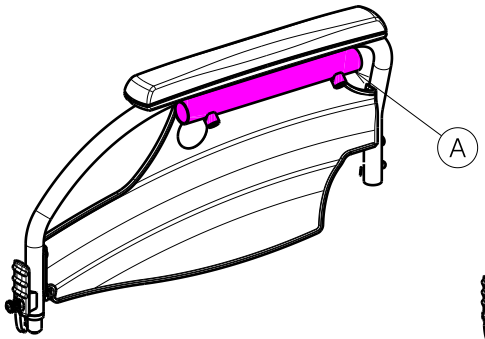

B03 V-SERIES

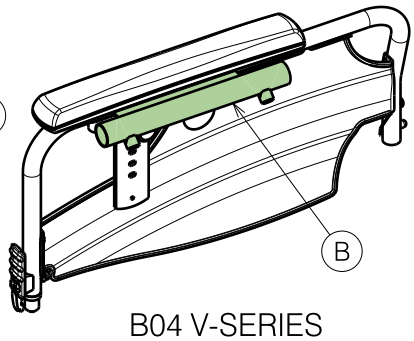

B04 V-SERIES

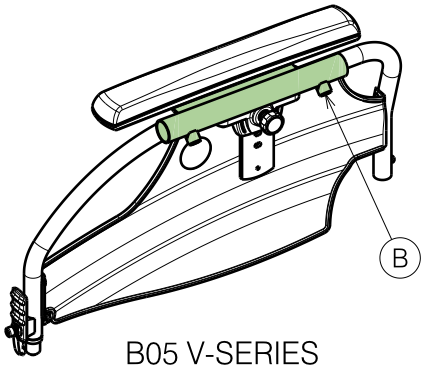

B05 V-SERIES

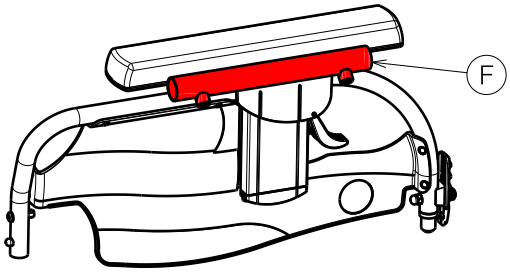

B04 V-SERIES 2016

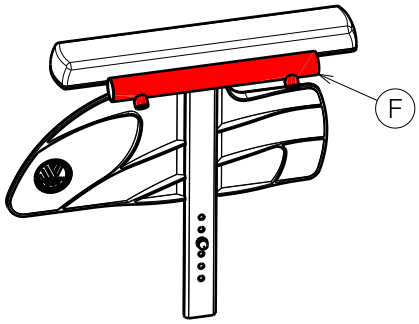

BI5 V500

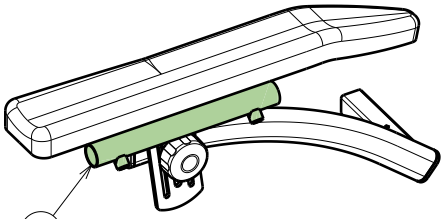

TIMIX GT

TIMIX / FOREST 3

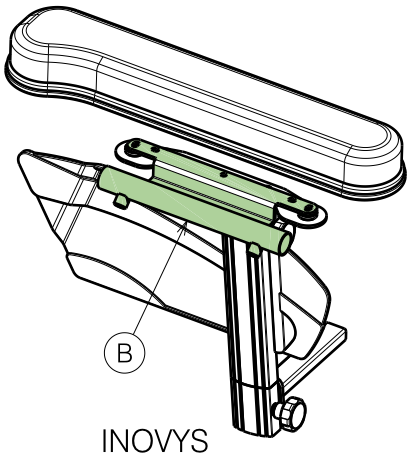

INOVYS

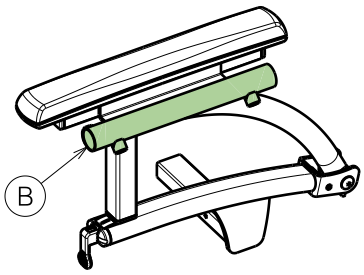

NAVIX

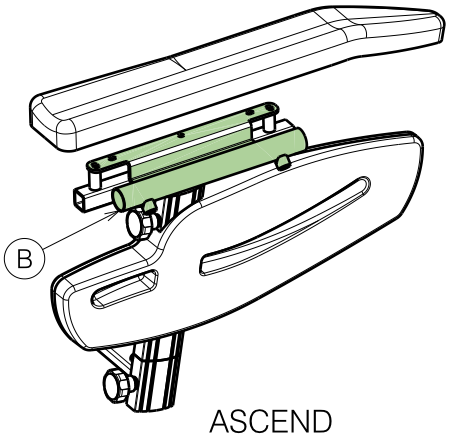

ASCEND

UNIVERSAL B13 2013				Plan No.
				P000025 / E
Scale: 1:8	Drafted	Verified	Confirmed	VERMEIREN
Date	20/03/2013	26/09/2017	26/09/2017	
Initials	SD	SD	PJ	

P000025 / E

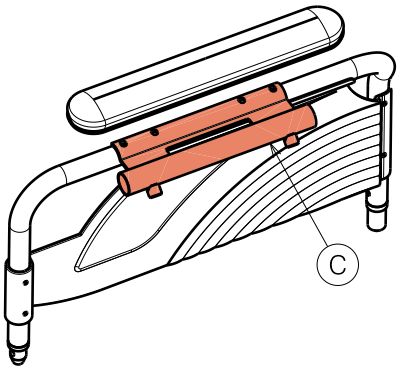

B02 708D

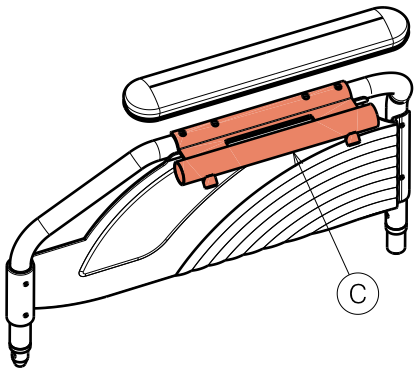

B03 708D

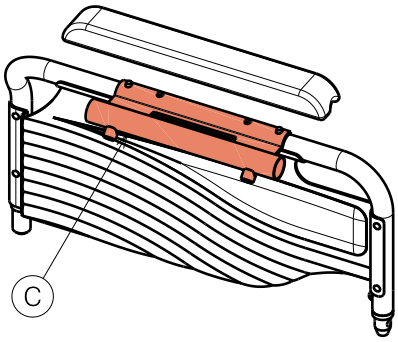

B02 ECLIPS / JAZZ

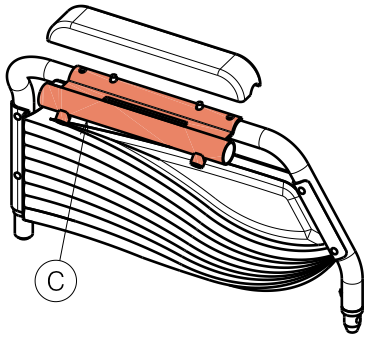

B03 ECLIPS / JAZZ

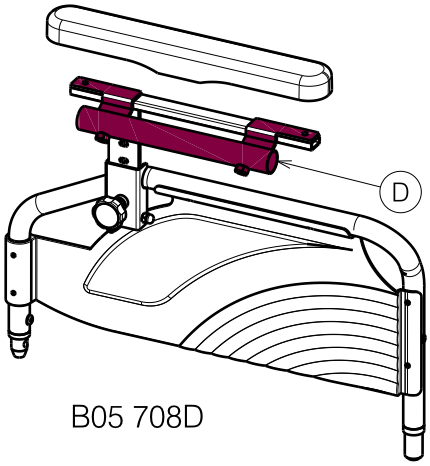

B05 708D

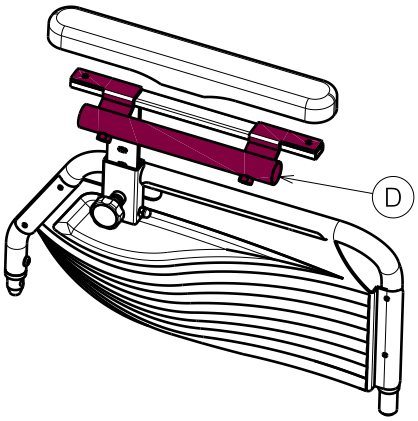

B05 ECLIPS / JAZZ

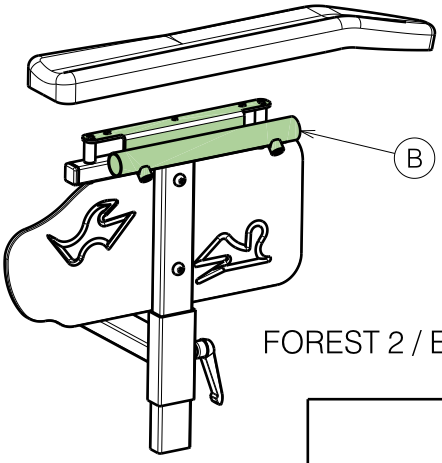

FOREST 2 / EXPRESS

UNIVERSAL B13 2013				Plan No.
				P000025 / E
Scale: 1:8	Drafted	Verified	Confirmed	
Date	12/03/2013	26/09/2017	26/09/2017	
Initials	SD	SD	PJ	

P000025 / E